NATIONAL ENERGY TECHNOLOGY LABORATORY

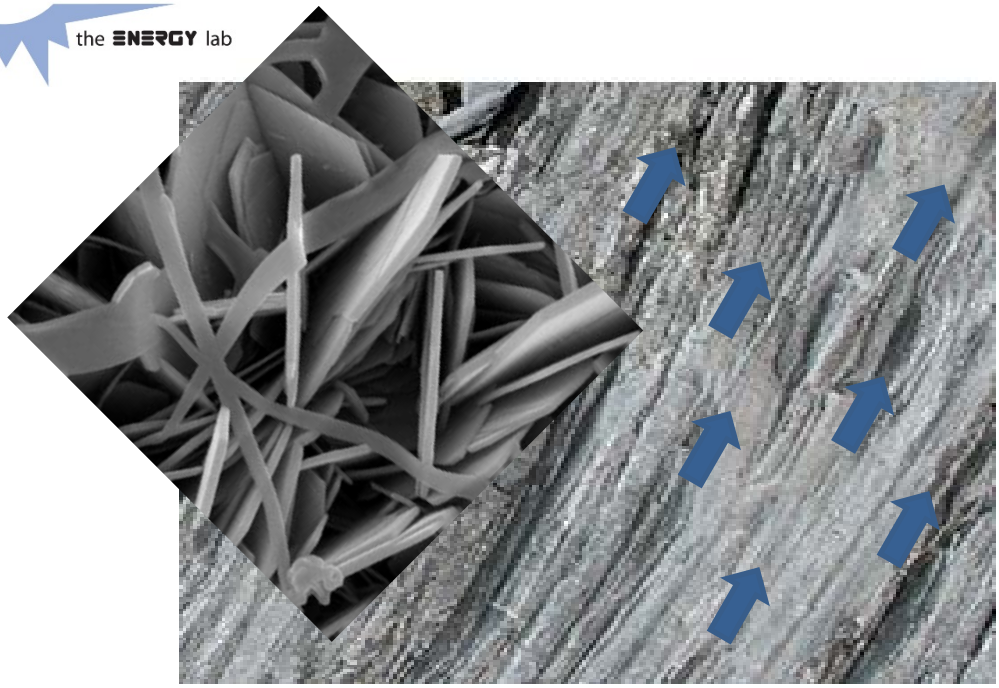

Review of the Effects of CO_2 on Very-Fine-Grained Sedimentary Rock/Shale – Part II: Clay Mineral & Shale Response to Hydration

5 August 2016

U.S. DEPARTMENT OF ENERGY

Office of Fossil Energy

NETL-TRS-10-2016

Disclaimer

This report was prepared as an account of work sponsored by an agency of the United States Government. Neither the United States Government nor any agency thereof, nor any of their employees, makes any warranty, express or implied, or assumes any legal liability or responsibility for the accuracy, completeness, or usefulness of any information, apparatus, product, or process disclosed, or represents that its use would not infringe privately owned rights. Reference therein to any specific commercial product, process, or service by trade name, trademark, manufacturer, or otherwise does not necessarily constitute or imply its endorsement, recommendation, or favoring by the United States Government or any agency thereof. The views and opinions of authors expressed therein do not necessarily state or reflect those of the United States Government or any agency thereof.

Cover Illustration: Stylized figure depicting the flow of supercritical CO_2 through a fine-grained rock mass in contrast with a photomicrograph of clay minerals that potentially can swell and impede flow (*Figures modified from: http://www.rigzone.com/news/oil_gas/a/124801/Musings_Will_Barnett_Shale_Study_End_Debate_Over_Gas_Outlook and from Evelyne Delbos, at : http://www.minersoc.org/photo.php?id=143*)

Suggested Citation: Lindner, E. *Review of the Effects of CO_2 on Very-Fine-Grained Sedimentary Rock/Shale -Part II: Clay Mineral & Shale Response to Hydration*; NETL-TRS-10-2016; NETL Technical Report Series; U.S. Department of Energy, National Energy Technology Laboratory: Morgantown, WV, 2016; p 68.

An electronic version of this report can be found at:

http://netl.doe.gov/research/on-site-research/publications/featured-technical-reports

https://edx.netl.doe.gov/carbonstorage

Review of the Effects of CO_2 on Very-Fine-Grained Sedimentary Rock/Shale - Part II: Clay Mineral & Shale Response to Hydration

Ernest N. Lindner

U.S. Department of Energy, National Energy Technology Laboratory, AECOM, Morgantown, WV 26507

NETL-TRS-10-2016

5 August 2016

This page intentionally left blank.

Table of Contents

EXECUTIVE SUMMARY 1
1. INTRODUCTION 3
1.1 SCOPE 3
1.2 PROBLEM STATEMENT 3
2. MECHANISMS OF EXPANSION/CONTRACTION 4
2.1 EXPANSIVE BEHAVIOR OF MUDSTONES 4
3. LABORATORY TESTING 15
3.1 CURRENT METHODS USED TO ASSESS ROCK SWELL 15
3.2 SAMPLE DISTURBANCE AND SAMPLE STORAGE 24
3.3 CURRENT TEST LIMITATIONS AND RECOMMENDATIONS 26
4. EXPERIMENTAL EVIDENCE ON SWELLING DUE TO HYDRATION 28
4.1 SWELL POTENTIAL VERSUS ACTUAL SWELL 28
4.2 CORRELATION STUDIES - HYDRATION OF CLAYS AND SHALES 28
4.3 FACTORS IMPORTANT IN HYDRATION RESPONSE 39
5. CONCLUSIONS AND RECOMMENDATIONS 49
5.1 CONCLUSIONS 49
5.2 RECOMMENDATIONS 50
6. REFERENCES 52

List of Figures

Figure 1: Illustration of microfabric involved in mechanical swell. 6
Figure 2: Examples of phyllosilicate layer types. 8
Figure 3: Swell due to absorption of ions between layers in sodium montmorillonite. 12
Figure 4: General relationship of some clay minerals to Atterberg limits. 13
Figure 5: Slake durability test apparatus. 16
Figure 6: Sketch of the 3-D (triaxial) free swell test apparatus. 18
Figure 7: Oedometer swell test. 19
Figure 8: Schemastic of uniaxial swell test. 20
Figure 9: Triaxial system with neutron and X-ray tomography capability. 21
Figure 10: Example of hollow cylinder test configuration. 22
Figure 11: Stainless steel/aluminum oedometer using small angle neutron beam scattering to observe caprock swell with supercritical CO_2. 24
Figure 12: Proposed relationship of clay content and activity to swell potential of compacted clay samples by Seed et al. (1962). 31
Figure 13: Proposed empirical relationship of clay content and *PI* to categories of clay soil swell by van der Merwe (1975). 33
Figure 14: Proposed swelling potential chart based on CEC and *LL* by Yilmaz (2006) 35
Figure 15: Definition of swell categories based on swelling pressure and volumetric expansion from Shakoor and Sarman (1992). 37
Figure 16: Effect of immersion fluid on free swell of Bringelly shale. 42
Figure 17: Example of anisotropic swell strain vs. time. 46

List of Tables

Table 1: Classification of Planar Hydrous Phyllosilicates 9
Table 2: Factors Influencing the Swelling of Compacted Clay Soils from Seed et al. (1962) 29
Table 3: Other Proposed Relationships of Plasticity Index of Expansive Soils 32
Table 4: Field Behavior versus Clay Mineral Type 33
Table 5: Correlation of Swell Categories with *LL* by Dakshanamurthy and Raman (1973) 34
Table 6: Free Swell Limits for Classification by Yilmaz (2006) 35
Table 7: Factors Important to Shale Behavior by Underwood (1967) 40
Table 8: Various Additives for Clay Stabilization by Fink (2013) 43
Table 9: Factors Considered Important in Assessing Shale Swell Behavior In Situ 48

Acronyms, Abbreviations, and Symbols

Abbreviation	Description
Acronyms/Abbreviations/Symbols	
1-D	One-dimensional
2-D	Two-dimensional
A	Activity
AIPEA	International Association for the Study of Clays
$AlCl_3$	Aluminum chloride
ASTM	ASTM International
$CaCl_2$	Calcium chloride
$CaSO_4$	Calcium sulfate
CEC	Cation exchange capacity
CH_4	Methane
CMC	Carboxymethyl cellulose
CO	Carbon monoxide
CO_2	Carbon dioxide
DOE	U.S. Department of Energy
H_2O	Water
HCO_2K	Potassium formate
ISRM	International Society of Rock Mechanics
KCl	Potassium chloride
LL	(Atterberg) liquid limit
LVDT	Linear Variable Differential Transducer
NaCl	Sodium chloride
NETL	National Energy Technology Laboratory
OH	Hydroxyls
PHPA	Partially-hydrolyzed polyacrylamide
PI	Plasticity index (PI = LL-PL)
PL	(Atterberg) plastic limit
$scCO_2$	Supercritical carbon dioxide
SL	(Atterberg) shrinkage limit

Acronyms, Abbreviations, Symbols (cont.)

Abbreviation	Description
Units	
^{o}C	degrees Celsius
^{o}F	degrees Fahrenheit
ft	feet
g	gram
GHz	gigahertz
GPa	gigapascal (10^{+9} Pa)
hrs	hours
Hz	hertz
kg	kilogram (10^{+3} g)
kg/m^3	kilogram per cubic meter
km	kilometer
kPa	kilopascal (10^{+3} Pa)
m	meter
meq	millequivalent; the number of ions which total a specific quantity of electrical charges
min	minutes
MPa	megapascal (10^{+6} Pa)
µm	micrometer, micron (10^{-6} m)
ηm	nanometer (10^{-9} m)
Pa	pascal
psi	pounds per square inch
s	second

Acknowledgments

This work was completed as part of National Energy Technology Laboratory (NETL) research for the U.S. Department of Energy's (DOE) Carbon Storage Program. The author wishes to acknowledge Cindy Powell and Traci Rodosta (NETL Research and Innovation Center) as well as Angela Goodman (NETL Technical Portfolio Manager Carbon Storage) for guidance, direction, and support.

In addition, the author wishes to thank Dustin Crandall (Task Technical Coordinator, Geological and Environmental Systems, NETL Research and Innovation Center) for his technical review, direction and support.

EXECUTIVE SUMMARY

Carbon dioxide (CO_2) occurs naturally underground and recently, is also being employed in a number of industrial subsurface applications. In response, a comprehensive review was initiated to study the potential effects of the flow of CO_2 on very-fine-grained sedimentary rock, in particular, shale. An emphasis of the study is to characterize the potential of the shale to swell when exposed to CO_2, and how to identify the potential for swell when CO_2 is used at a specific site.

This report is the second in a sequence of reports from this study. The present material examines mechanisms and factors related to the swell induced by hydration of clay minerals, clays, and shales. An understanding of hydration mechanisms of clays and shales is intended to provide a basis for understanding the response of shale to CO_2.

The report is divided into three sections. Section 1 summarizes the various mechanisms that can induce volume expansion/contraction in shales, and examines clay mineral structure and related physiochemical swell mechanisms. The second section examines the current experimental techniques used to quantify the potential for expansive strain and pressures. The last section examines experimental observations and correlations on physiochemical swell and identifies a list of factors of importance that affect swell.

Major summary points of this report are:

1. The mechanisms underlying the behavior of shale upon hydration are: (1) mineral alteration swell: a reaction of one (or more) minerals in the rock mass inducing expansion; (2) mechanical swell: the result of reduction in capillary-related pressures upon wetting, causing a mechanical response; and (3) physiochemical swell: physiochemical reactions of clay minerals that expand the rock matrix due to sorption. Physiochemical swell is considered the dominate mechanism applicable to CO_2 swell, but mechanical swell may also be a factor in observations.
2. Physiochemical swell is related to the layered, crystalline structure of clay minerals (understood as phyllosilicates/sheet silicates). Expansion or contraction of the minerals is induced by changes in electrostatic balance within and between clay mineral layers and the interlayer cations and water molecules that bind the layers together. There are a number of different clay minerals
3. Several testing techniques are available to evaluate rock swell potential, but most current techniques have significant limitations, and the need for new technology is paramount. It is recommended that the hollow cylinder concept be further developed and issues such as swell and borehole stability be investigated with large samples.
4. Sample disturbance can be a major factor in conducting and evaluating laboratory testing, and needs to be actively considered in test planning. It is recommended that a test program be conducted to characterize the effects of sample disturbance (including depressurization during sampling in situ) on the geomechanical properties and the swell response of shales.
5. Upon a review of hydration swell correlations, it is evident that a single factor cannot predict swell potential or pressure accurately for shales. In addition to factors considered

in correlation studies, conditions such as the type and chemistry of the external fluid, fabric anisotropy, temperature, and pH can also influence the observed swell to some extent.

6. Upon evaluations of the swell correlation studies and other literature, a list of factors that influence hydration swell of shales is proposed (see Table 9).

Recommendations are provided at the end of the report.

1. INTRODUCTION

1.1 SCOPE

This report is part of a series of reports that reviews the current state of knowledge on the response of very-fine-grained sedimentary rocks to the flow of supercritical carbon dioxide ($scCO_2$) and brine. In particular, this multi-part review focuses on the potential for rock expansion and contraction behavior (typically stated as rock swell) of shales as well as other effects that can change fracture aperture, affect fluid flow, and affect rock properties important for captured carbon storage and enhanced geothermal systems.

The present volume examines mechanisms and factors related to the swell induced by hydration of clay minerals and shales. This report first discusses the possible causes that induce expansion of shales due to hydration, and in particular, describes the swell of clay minerals. Next, typical test equipment for swell testing is identified, and finally the experimental evidence of swell in argillaceous materials is examined to assess the factors important to this behavior. An understanding of the hydration mechanisms of clay minerals and shales can serve as a fundamental basis in understanding the response of shale to CO_2.

1.2 PROBLEM STATEMENT

CO_2 exists naturally in the subsurface, together with other gases such as carbon monoxide (CO), methane (CH_4), hydrogen sulfide (H_2S) and noble gases. In addition, in recent years, CO_2 has been injected in the subsurface for the purposes of enhancing hydrocarbon recovery and for geothermal energy production, and is also being studied for storage at depth to address issues of climate warming. As all these efforts are often conducted at substantial depths in saline environments, the resulting fluid is actually a combination of $scCO_2$ and brine, with some dissolution of the CO_2 into the brine. As $scCO_2$ is less dense than the native brine, after injection, there is a natural flow upwards, passing through the more-permeable injection horizon (say a sandstone or limestone unit) until encountering a less-permeable horizon, often identified as a caprock or seal shale.

The flow through the caprock can have significant consequences. For CO_2 sequestration, the caprock is intended to limit the upward CO_2 flow into the biosphere as much as possible. This flow is actually a dynamic process, as the $scCO_2$-brine is expected to interact with the caprock which will influence the transmissibility of the material system. For some factors, the physiochemical reactions may increase the transmissibility, while other factors may substantially reduce the flow. (This also pertains to applications where the formation is used to store $scCO_2$.)

The intent of the overall review is to examine the current literature to identify the possible range of expected effects of the $scCO_2$-brine fluid on shale rock masses. As there is limited information on the overall topic, the search scope includes summarizing the effects of other fluids on shale response. For administrative purposes, the results of the study are presented in a set of reports. In each report, the relevant topics are critically examined, identifying limitations and making recommendations to address issues in current technology.

2. MECHANISMS OF EXPANSION/CONTRACTION

2.1 EXPANSIVE BEHAVIOR OF MUDSTONES

2.1.1 General

The expansive behavior of clays and mudstones has been observed in various engineering efforts including foundation heave and attendant structural failure, tunnel roof falls, invert heave and sidewall failure, and borehole closure and collapse (e.g., Chen, 1988; Steiner, 1993; Day, 2005)[1]. This volume behavior (often termed "swelling") is typically associated with a change in water availability in the subsurface and a change in stress conditions; it is a time-dependent process and can continue for long periods. Although most discussion on this behavior is on expansion or swell, the underlying mechanisms can, in some cases, be reversed and cause contraction/shrinkage as well.

According to International Society of Rock Mechanics (ISRM) swelling is described as (ISRM, 1983a):

> "... a combination of physico-chemical reaction[s] involving water and stress-relief. The physico-chemical reaction[s] with water is usually the major contributor to swelling but it can only take place simultaneously with or following, stress relief."

While this can be an accurate statement, swelling of clay minerals can be more complex and can be a response to changes in one of several external factors[2]. For the case of a tunnel excavation or in drilling a borehole, the stress-change clearly precedes the reaction with an external fluid (water). However, the relationship is not obvious as for example in foundation heave, where a simple change in the effective moisture of the underlying clay or mudstone (due to a change in surface evaporation) can produce substantial expansion and foundation distress[3].

Conceptually, the underlying mechanisms of this volume change behavior can be due to one of three fundamental causes: (1) an alteration (chemical reaction) of a mineral in the rock mass, which transforms into another mineral form, resulting in a volume increase; (2) a capillary and pore response of the microfabric which can induce expansion; and (3) a physiochemical reaction of clay minerals that expand the rock fabric. The latter cause is often understood as, "swelling rock", but all three causes of swell are briefly discussed in this section.

---

[1] Note that there can be other causes for tunnel failures and borehole collapse in mudstones, such as failure of the rock under the changed stress conditions, loss of internal strength (squeezing rock) or the creep of the surrounding rock mass into the excavated space (e.g., Einstein, 1996; Lindner, 1976). The focus in this context is only on the effects of volume expansion of the rock.

[2] Changes in external fluids or temperature can induce response as well.

[3] Note that the foundation geomaterials are in unstable state due to prior stress history.

2.1.2 Swell due to Chemical Alteration - Mineral Alteration Swell

Components within mudstones and clays can undergo alterations by hydration, oxidation and carbonation, causing expansion under specific conditions. One major example of this process is the oxidation of sulfide minerals. Sulfide minerals can be present in mudstone as part of the rock matrix or as separate layers, lens, nodules or stringers within the mudstone fabric (e.g., Anderson, 2008). Sulfides are easily oxidized when exposed to the atmosphere or to water. The transformation can result in a substantial volume increase, but the amount of swell and the swell rate varies with a number of factors.

In more detail, sulfide minerals, such as pyrite and marcasite (differing forms of iron disulfide), can potentially oxidize to ferric sulfate and sulfuric acid; sulfuric acid can then react with calcite, transforming it into gypsum (Dubbé et al., 1984; Maher et al., 2011). The amount of volumetric swell resulting from this overall process, however, is determined by the morphologies of the resulting gypsum crystalline structure (Dubbé et al., 1984). The process also may be strongly influenced (catalyzed) by the presence of oxidizing bacteria and can be notably time dependent (i.e., swelling can occur for years). In addition, it is observed that the process will not occur if the rock is fully submerged, (i.e., oxygen must be available for the process to proceed), and can be triggered by lowering of the water table near surface (Dubbé et al., 1984).

Another expansive chemical alteration involves the hydration of anhydrite (or anhydrous calcium sulfate, $CaSO_4$) to gypsum ($CaSO_4 \cdot 2H_2O$). However, the transformation process of anhydrite can be impacted by the structure of anhydrite itself within the rock mass, and in some configurations (described as “maturity”), the process can be significantly slowed, effectively making the mineral inert (Rauh and Thuro, 2007). In studying anhydrite transformation, these authors show experimentally that the amount of swelling strain significantly decreases with increasing grain size of the anhydrite. As noted by Wagner (2013), shales and clays containing anhydrite can expand up to 61% when exposed to water and can develop pressures up to 5 to 7 MPa. However, swelling pressures in the tunneling applications can be expected to be less than 2.5 MPa (Steiner, 1993).

2.1.3 Swell Due to Capillary Forces and Pore Response – Mechanical Swell

Capillary stresses can be induced by decreasing the effective stress on a material containing a network of small pores spaces, which are filled with fluids and gas. The initial response of the material structure due to the unloading will resist the expansion until the time the material is exposed to a fluid. Then, with the absorption of fluid, internal stresses are reduced, and the material expands.

This response, sometimes called mechanical swell (Einstein, 1996; Taylor and Smith, 1986) or capillary hydration (Roshan et al., 2015), can be described as the generation of negative excess pore pressures due to the unloading of the rock fabric. Then, as fluid is available, the pore-water menisci become enlarged, matric suction decreases, thereby allowing for expansion of the rock fabric. It is a function of the overall microfabric and is generated by inter-particle capillary forces. The forces will be controlled by the pore size and the type of fluid(s) present in the connected pore space network. These forces will also be a function of the degree of saturation, surface tension, and capillary radius (Wayllace, 2008). The features of capillary bonding which leads to the generation of negative pressures are illustrated in Figure 1.

While some authors consider this capillary effect to be minor (Wayllace, 2008; Snethen et al., 1977), this process can be significant in specific circumstances with mudstones. The subsurface effective stresses within mudrock that induce this form of swell can be significant due to lithification processes. High horizontal stresses are measured in even near-surface mudrock rock units (on the order of 10 to 20 MPa at depth of less than 30 m), which substantially exceed the existing overburden stresses. The stress relief upon sampling of mudrocks can be substantial and therefore mechanical swell is considered an important mechanism in studying shale swell. In addition, subsequent drying of the samples[4] can increase these stresses, resulting in increased swell upon wetting. Correspondingly, Santarelli and Carminati (1995) argue that swell due to capillary hydration dominates observed expansive behavior of shale in the laboratory.

For this report, definition of mechanical swell is expanded to include the possible response of non-interconnected (isolated) gas/fluid-filled pore spaces within the rock fabric to load changes (a discussion on pore response is provided by Endres and Knight, 1997).[5] Conceptually, the entrained gas and fluid inclusions will initially resist expansion due to unloading of the material, but with hydration, the stress in the inclusions will equilibrate and allow expansion to occur. The mechanism is also suggested to be time-dependent, as fluid flow through the rock matrix to/from the pores will dissipate these stresses with time.

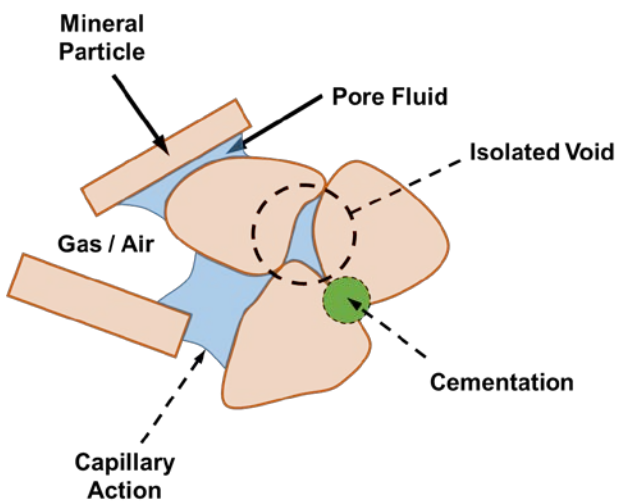

Note: Interlocking of clay minerals may also be present. Cementation may be due to carbonate, silica, or iron oxide content.

Figure 1: Illustration of microfabric involved in mechanical swell.

Another consideration in discussing mechanical swell is the cementation present in the microfabric, which will resist deformation and increase strength. Therefore, swell will be less in stronger mudrocks with a higher carbonate content.

---

[4] Drying may be part of the testing procedure or due to dryout during storage prior to testing.

[5] This mechanism is typically not discussed in the literature in regards to swell, but may be significant in shales with a significant amount of isolated pores and a low permeability matrix.

2.1.4 Physiochemical Reactions of Clay Minerals – Physiochemical Swell

2.1.4.1 General

Stress changes and external fluid availability can cause various physiochemical reactions of the clay mineral structures within a shale. The amount of swell is a function of the amount of clay minerals, the specific mineral type(s) and the structural configuration of the minerals within the material. Various aspects of clay mineralogy and swell response are discussed extensively in the literature (e.g., Gillott, 1968; Grim, 1968; Mitchell and Soga, 2005; Dixon and Weed, 1989, Holtz et al., 2011; Farrokhrouz and Asef, 2013). The topic of clay mineral structure and related swell mechanisms are briefly summarized here to provide a context in evaluating the effect of CO_2 on mudstones discussed in subsequent reports.

2.1.4.2 Clay Mineral Structure

The term clay minerals refers to (Guggenheim and Martin, 1995):

> "... phyllosilicate minerals and to [other] minerals which impart plasticity to clay and which harden upon drying or firing."

This is an expanded version of an earlier definition by the Association Internationale pour l'Etude des Argiles (International Association for the Study of Clays, or AIPEA) which defined the minerals solely as phyllosilicates (Bailey, 1980). In discussing rock swell, the contribution of "other" minerals which impart plasticity and contribute to swell are undefined at present, and therefore, the discussion on clay minerals is limited to the set of hydrous silicates called *phyllo*silicates (from the Greek, *leaf*). Given the general leaf- or plate-like structure of these crystals, phyllosilicates are also termed *layered silicates* or *sheet silicates*.

The structure of phyllosilicates are characterized primarily by two major aspects. As discussed by Mitchell and Soga (2005):

> The different clay mineral groups are characterized by the stacking arrangement of sheets (sometimes chains) of these units and the manner in which two successive two or three-sheet layers are held together.

Fundamentally, there are two basic types of sheet structures of phyllosilicates: (1) tetrahedral sheets; and (2) octahedral sheets[6]. If a tetrahedral sheet links with an octahedral sheet, a so-called 1:1 layer is formed. If an octahedral sheet is linked (sandwiched) between two tetrahedral sheets, a 2:1 layer is formed. These two types of phyllosilicate groups are illustrated in Figure 2.

This sheet arrangement allows for the substitution of various ions within the layers and between the layers, which generates a range of possible different configurations. The various configurations can be classified by layer type and the layer charge. The AIPEA Nomenclature Committee has classified planar phyllosilicates as shown in Table 1. However, given the nature of these minerals, there are other possible configurations not in the table including non-planar phyllosilicates (Guggenheim et al., 2006).

---

[6] The tetrahedral sheet cannot exist by itself but must be linked to an octahedral sheet.

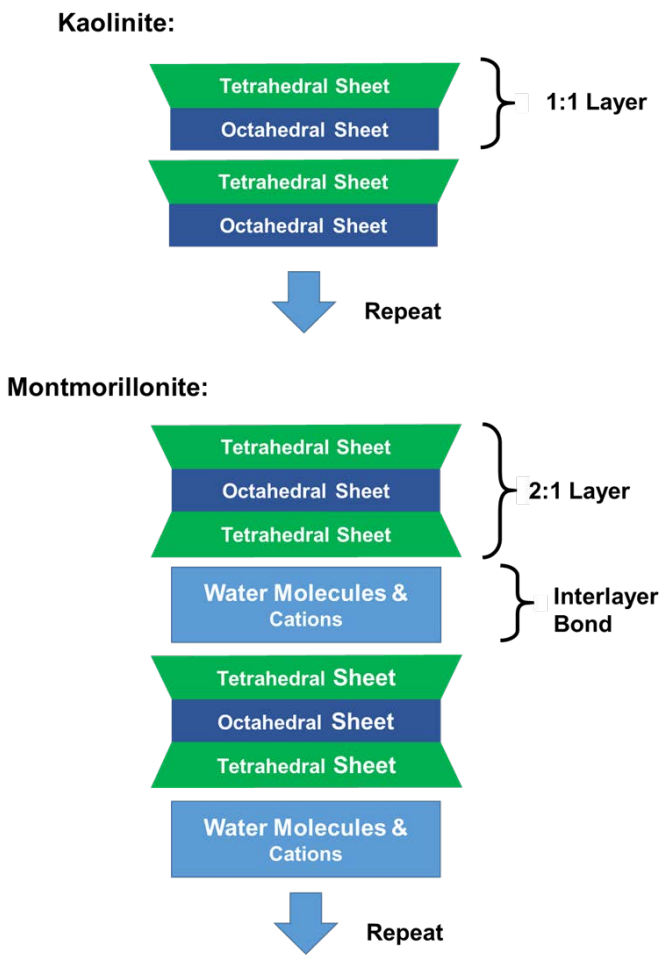

Not to Scale

Source: Based on Skippervik (2014)

Figure 2: Examples of phyllosilicate layer types.

Simply, the way the layers are stacked and are bounded together by specific bounding and metallic ions in a crystal lattice define different clay minerals (Holtz et al., 2011). Common mineral terms identified in engineering literature include montmorillonite, illite, kaolinite, halloysite, chlorite and vermiculite (highlighted in Table 1). The three most common clay minerals species identified in geotechnical literature are montmorillonite, illite, and kaolinite (e.g., Day, 2005).

Table 1: Classification of Planar Hydrous Phyllosilicates

Mineral Group (x = Net Layer Charge) [a,b]	Layer Type	Interlayer Material	Species Examples [c]
Serpentine - Kaolin- (x ~ 0)	1:1	None or H_2O only	Lizardite, **Kaolinite**, Dickite, **Halloysite**
Talc - Pyrophyllite (x ~ 0)	2:1	None	Talc, Willemseite, Pyrophyllite
Smectite (x ~ 0.2 to 0.6)		Hydrated Exchangeable Cations	**Montmorillonite**, Beidellite, Saponite, Hectorite, Sauconite
Vermiculite (x~ 0.6- to 0.9)		Hydrated Exchangeable Cations	Dioctahedral, Vermiculite, Trioctahedral Vermiculite
True (Flexible) Mica (x ~ 0.85 to 1.0)		Non-hydrated Monovalent Cations (> 50% Monovalent)	Annite, Lepidiolite, Muscovite, Paragonite
Interlayer Deficient Mica (x ~ 0.6 to 0.85		Non-hydrated Mono- or Divalent Cations	**Illite**, Galuconite, Brammallite
Brittle Mica (x ~ 1.8 to 2.0)		Non-hydrated Divalent Cations (> 50% Divalent)	Margarite, Clintonite, Anandite
Chlorite (x is variable)		Hydroxide Sheet	Clinochlore, Chamosite, Donbassite, Cookeite, Sudoite
Variable [d] (x is variable)	1:1, 2:1	Regularly Interstratified	Dozyite
	2:1	Regularly Interstratified	Corrensite, Aliettite, Hydrobiotite

Source: Based on Guggenheim et al. (2006)

Notes:

[a] Non-planar phyllosilicates include modulated structures (such as Antigorite, Sepiolite, Palygorksite), spheroid structures (e.g., Chrysotile), thread-like tube structures (e.g., Imogolite) and ring-shaped to disordered structures (e.g., Allophane); see Table 3 of Guggenheim et al. (2006) for additional details.

[b] More-common mineral terms in geoengineering are highlighted in **Blue** (not in source). Also the Octahedral Character column in original table not show here.

[c] Only a few examples of species are shown from source.

[d] The group is also termed a "Mixed Layer" by others (e.g., Wilson, 2013); other groups composed of irregularly interstratified layers are not named, but are included under this term as well.

Examining the clay mineral structure on a larger scale, the microfabric of mudrocks is not uniform mass, but rather is formed by an aggregate of groups of phyllosilicates with other minerals and voids (pores) together with internal fluids and gases. It is generally accepted that phyllosilicates are primarily responsible for the observed expansion of clays and mudrocks. However, while the orientation of clay mineral platelets within a single element/stack/particle may be generally aligned, the various elements in the microfabric may or may not be[7]. Further, given the electrostatic nature of the mineral platelets, typical arrangement/associations of the various clay mineral elements may be identified (Mitchell and Soga, 2005) and the structure may be dispersed or compact (aggregated). All of which makes for a highly variable system.

This variety of the possible configurations can result in a range of physical response, despite the microfabric having the same overall amount and type of clay minerals. The aspects of the arrangement of the microfabric (including the connectivity of pores or lack thereof) will directly affect the interaction of material structure as well as the individual clay mineral elements with changes in ionic fluids and applied loads that induce swell.

2.1.4.3 Swell Mechanisms

Given the electrostatic nature of clay minerals, the expansion or contraction of the clay unit structure is the result of balancing electrostatic forces among crystalline surfaces, ions and H_2O.[8] As observed by Terzaghi et al. (1996), this intrinsic behavior is determined by the mineralogy of the solids, the chemistry of the pore water, and the degree of aggregation of the particles. The chemistry of the pore water refers mainly to the type of exchangeable cations in the pore fluid and the electrolyte concentration. Terzaghi et al. (1996) also notes that the increased swell behavior is associated with very small and thin clay mineral particles, such as those of montmorillonite.

The electrostatic forces can also be influenced by the organic content of the system (Johnson, 1952). Though little discussed, additional organic components can significantly alter the response of the material.

As to the underlying mechanisms that causes clay mineral swell, there is no general consensus on the most appropriate explanation for the clay mineral expansion (e.g., McBride, 1989). From a survey of existing theoretical models in the literature, the volume expansion of argillaceous materials may be due to one of the following mechanisms:

1. Absorption of ions into the sheet structures itself and changing the internal arrangements and influencing sheet spacing[9]

---

[7] The random orientation/arrangement of clay mineral elements within a domain has been labeled *turbostratic* (Gillot, 1968).

[8] The dipolar structure of water causes it to be electrostatically attracted to the surface of clay particles (Day, 2005)

[9] A distinction is made in this discussion: absorption is defined here as the incorporation of the ion onto the mineral layer versus adsorption where the ion is introduced into the general region of the layer. The term sorption refers to both processes.

2. Absorption of ions between layers, increasing the sheet separation, thereby expanding the clay elements and microfabric
3. Adsorption on the outer layer of clay mineral particles, increasing mineral configuration size and spacing
4. Adsorption of ions in the general region between layers causing expansion by osmotic pressure

For the first process, the water molecules can integrate into the surface of the silicate sheet by substitution in the sheet structure of hydrogen ions by H_2O (isomorphic substitution), which will change the electrostatic configuration. The substitution causes the sheet to sheet spacing to expand, and is termed intra-sheet swell.

In the second process, the absorption of water or the intra-element swell of phyllosilicates, is caused by the hydration of the exchangeable cations linking basal crystal surfaces (e.g., Roshan et al., 2015). In this process, termed “intra-crystalline” swelling (Bock et al., 2010) or “innercrystalline” swelling (Madsen and Vonmoos, 1989), the exchangeable cations hydrate upon access to water and reorder themselves on a plane halfway between the clay layers in various configurations. This leads to increased spacing between the layers and an expansion of the element volume. For example, this process can double the spacing in montmorillonite (Madsen and Vonmoos, 1989). The process is illustrated in Figure 3.

The third process is the hydration of the outer surface of clay particles (Bock et al., 2010). The addition of the water molecules to outer surface of various mineral layers swells the overall structure. It is dependent of the configuration and strength of electrostatic charge of the surface of the clay mineral elements.

The fourth process involves the adsorption of water ions into the larger mineral volume adjacent to the mineral layers (also termed osmotic swelling, or swelling due to double layer theory), and results from concentration differences of dissolved ions within diffuse layers and the free bulk water within the pore water (Roshan et al., 2015). Any physiochemical change within the double diffusive layer (as by hydration) is accompanied by a change in the osmotic pressure, thereby changing the volume of the system. This is a long-range interaction, which mostly depends on ionic concentration, the type of exchangeable ions, pH of the pore water, as well as the clay mineralogy.

In a specific instance of physiochemical swell, one or all of these sorption mechanisms may contribute, depending on the mineral type. All of these sorption processes are controlled by the amount of surface area of the clay layers which also varies with the clay mineral type (Wang et al., 2015). The volume of adsorbed ions is strongly correlated with the surface area and the source of high surface area comes from the microporous organic or clay fraction, thus the anisotropy of the fabric may significantly impact the sorption and swelling capacity.

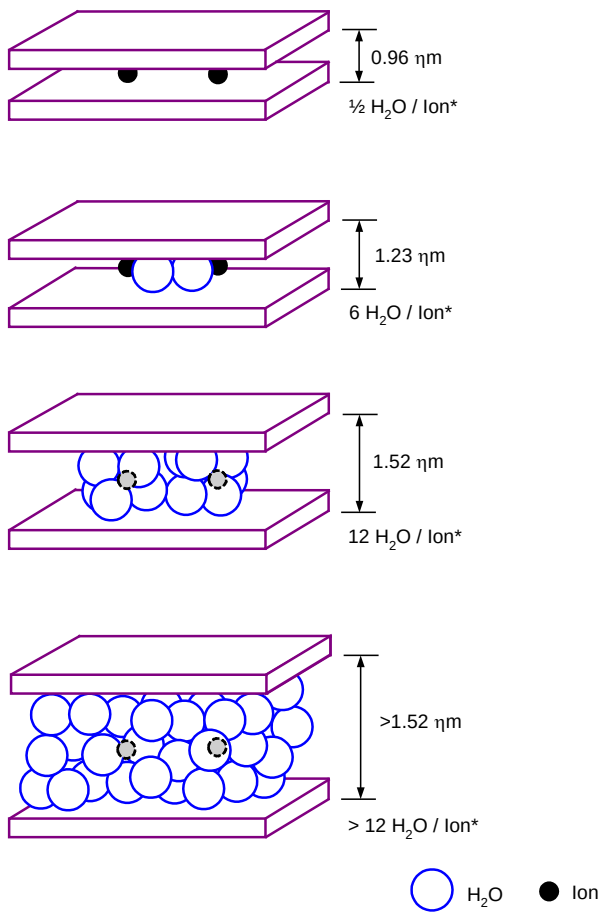

Source: Modified from Madsen and Vonmoos (1989)

Figure 3: Swell due to absorption of ions between layers in sodium montmorillonite.

The amount of volume change is also dependent on the specific ions present, as for example, potassium ion containing clay units show a lower tendency to swell than those with sodium ions (Hensen and Smit, 2002). In addition, all these processes can be theoretically reversed (to some degree)[10], which would cause contraction of the overall structure.

[10] While the individual theoretical processes may be reversed in some manner, say by heating, the measured expansion/contraction behavior will change the geometry clay mineral system, making a full reversion to the original configuration practically impossible; simply, the swell behavior of the system is stress path dependent.

2.1.4.4 Clay Mineralogy Related to Clay Response

It has been observed that the type of clay minerals correlates with plasticity of the material[11], which in turn is related to the potential for swell. This relationship allows the general correlation of clay mineral types to index properties for plasticity, as shown in Figure 4. The figure uses the Atterberg index (limit) tests (e.g., Atterberg, 1911a), specifically the plasticity index (*PI*) and liquid limit (*LL*), to measure material behavior.

Data points for the minerals from the kaolinite-serpentine group (i.e., halloysites and kaolinites) and the chlorite group tend to have reduced plasticity values in the diagram (Casagrande Plasticity Chart), with *PI* values less than 30, and *LL* less than 65 for these clays. As both the *PI* and *LL* have been shown to directly correlate with swell, the relationship in the diagram suggests that these clay minerals would be less prone to swelling. In contrast, the minerals from the smectite group (montmorillonite) and mica (illite) show increased *PI* values together with an increased range of *LL*, and therefore, tend to be more prone to swelling. Often smectites are identified as "swell-prone" clay minerals.

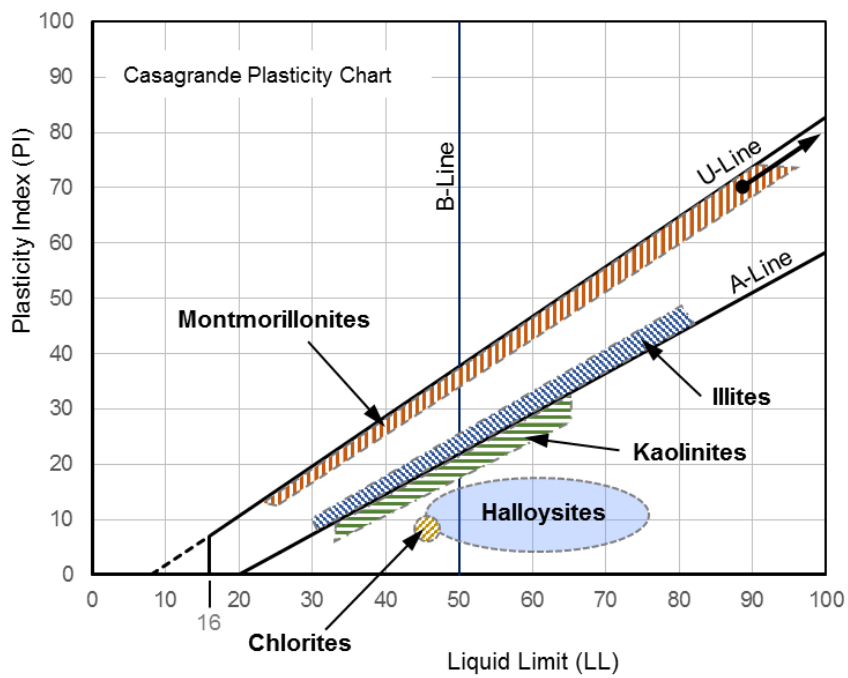

Source: Modified from Holtz et al. (2011).

Figure 4: General relationship of some clay minerals to Atterberg limits.

In discussing the expansion of mudstones, it is critical to note that the fabric of mudstones (in contrast to clays) have a compressed, developed structure due to increased loads due to burial

[11] Plasticity is defined as the ability to sustain a coherent mass when deformed continuously under a finite force, and to maintain the current structure after the force is removed.

over time. The lithification process alters the microfabric by loading, temperature and geochemical processes that can, for example, increase clay mineral element size. Lithification can introduce and potentially add carbonates, iron oxides and silica to the material matrix, introducing cementation of the fabric (which resists expansion). Therefore, while the fundamental theoretical concepts of clay mineral expansion are the same for both clay and mudstones, the two materials can be expected to differ in specific response. Simply, a mudstone should not be treated as some alternate form of a clay soil, and methods used for identifying and classifying expansive soil are not always appropriate for swelling rock.

2.1.5 Summary

In review of the mechanisms that induce expansion in clays and shales, the following is noted:

- The expansion of shales can be due to: (1) an alteration/reaction of some mineral in the rock mass; (2) the result of reduction in capillary pressures upon wetting, causing a mechanical response; and (3) physiochemical reactions of clay minerals that expand the rock matrix due to sorption. The mechanisms can occur simultaneously.
- It can be understood that all clay minerals will swell upon hydration and stress change. However, there is a large range in this behavior depending on the fabric, and expansion can range from the negligible (in an engineering sense) to very pronounced, causing extensive damage.
- Mechanical swell is dominated by capillary forces, but it is also affected by cementation and material structure, and may be influenced by isolated pore response.
- Clay mineral swell is understood to be dominated by phyllosilicates, also termed sheet silicates. A number of different configurations/species exist of sheet silicates (Table 1).
- The intrinsic behavior of phyllosilicates is determined by the mineralogy of the solids, the chemistry of the pore water, and the degree of aggregation of the particles.
- While a number of possible sorption mechanisms can be proposed for physiochemical swell of clay minerals, there is no consensus on the actual mechanisms that apply. The applicable mechanisms will also vary with mineral species.
- In addition to the mineral type, the microfabric of mudstones will also control the amount of potential swell.
- Specific clay minerals can be related to index properties describing the plasticity of the material, which in turn, are related to the potential for expansion.
- The three most common clay mineral species identified in geotechnical literature are montmorillonite, illite, and kaolinite.
- As an observation, it can be surmised that the physiochemical reactions of clay minerals inducing swell due to sorption of H_2O will also apply to some degree to the sorption of CO_2. The swell behavior of CO_2 may also include mechanical swell. However, the mineral alteration involving the hydration of mudstones is not expected to directly apply to CO_2-brine-shale systems and is not discussed further in this report series.

3. LABORATORY TESTING

3.1 CURRENT METHODS USED TO ASSESS ROCK SWELL

A number of test methods have been applied to evaluate rock units for potential expansion or swell. Many of these methods are derived from the testing clay soils, such as using an oedometer or consolidometer (e.g., Day, 2005). Related standard test methods for swell have been developed under the auspices of the ISRM and ASTM International[12] (ASTM). The following is a brief discussion of the most common methods with some citations to provide a background context.

3.1.1 Atterberg Index Testing

The correlation between rock swell and index testing with clays has been investigated by a number of authors. The concept of index testing is to employ a generally simple test(s) which can be correlated with aspects of response that would otherwise require more sophisticated methods. Most notably, Atterberg Limit determinations[13] have been extensively used for index correlations, and in particular, the plastic limit (*PL)* and liquid limit (*LL)* tests (e.g., van der Merwe, 1975; Huang et al., 1986; Olsen et al., 2000). These tests involve remolding the sample, and changing the moisture content until a desired behavior is obtained; the test values (moisture contents) are expressed as a percentage of the weight of the oven-dried material. The *LL* is used to evaluate the material at the boundary between liquid and plastic states, a state with little shear strength. The *PL* is to determine the moisture content at the boundary of plastic and semi-solid states, as evidenced where the material can still be rolled to a prescribed diameter. A third Atterberg limit, the shrinkage limit (*SL)*, is also sometimes used; it is the moisture content at which a further loss in moisture will not result in further volume reduction. These limits are then correlated with more sophisticated test results for swell pressure or deformation.

In addition, derived indices from these limits have been used in correlations, including the *PI*, which is the difference between *LL* and *PL*, and the clay activity (*A)*, which is the *PI* divided by the percent of clay-sized particles of the sample. Test methods to determine the *LL* and *PL* are detailed in ASTM D4318; a test method for *SL* is presented in ASTM D4943.

The advantages of using index tests are economy and amount of data; the tests are quick and simple so a number of tests can be quickly conducted at relatively little cost across a site and at depth. The tests do provide information on some of the basic parameters influencing rock swell. However, the use of these index tests ignores the rock fabric; the overall deaggregation process for index testing of rock destroys the innate microfabric of a specimen and also excludes any consideration of the macrofabric at a site. For example, the cementation of the rock matrix that could restrict swell is completely destroyed in these tests. Limitations also include the aspects of

---

[12] Formerly, the American Society for Testing and Materials.

[13] Six limits were defined by Atterberg (1911a,b), but only three are in use, as noted by Day (2005): plastic limit, liquid limit, and shrinkage limit.

sample preparation. Testing with various shale samples indicates that the deaggregation process itself can influence the index values obtained, as demonstrated by Eid (2006)[14].

This destruction of the fabric limits the direct use of these methods to identify shale swell. While Atterberg index tests may prove useful in assessing the potential for response of a weekly lithified and uncemented shale (i.e., soil-like shale), the tests can be entirely misleading in assessing swell potential of more developed rock units having a stronger fabric.

3.1.2 Slake Durability

To assess the resistance of the rock fabric to hydration, a slake durability test is typically used. Essentially, several rock pieces are dried, weighed, placed in a drum, submerged and then rotated for a specific period of times in a water bath (see Figure 5). The pieces retained in the drum at the end of the cycle are then dried again and the new total weight of the pieces is recorded. The ratio of the final weight to the original weight is used as an index to the resistance to slaking/disintegration. The process may be repeated several times (cycles), summing the weight loss from all cycles. The standard test method proposed by the ISRM for determination of the slake-durability index is evaluated after two drying and wetting cycles (ISRM, 1979). Other authors have suggested additional cycles.

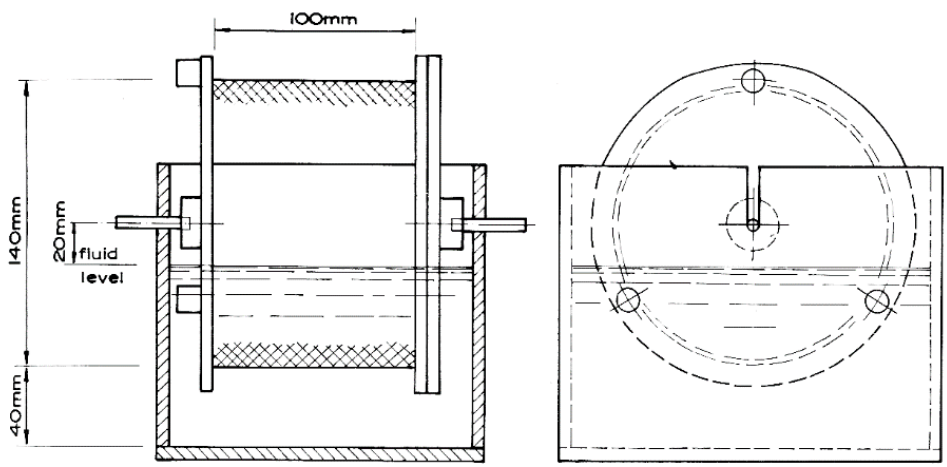

Source: Lama and Vutukuri (1978)

Figure 5: Slake durability test apparatus.

The method provides an assessment of the rock durability to wetting and drying (considered a surrogate to surface exposure) as well as a general estimate of the strength of the rock fabric

[14] The work demonstrated that ASTM standard methods of deaggregation can significantly underestimate (on the order of 10%) the clay-size fraction and liquid limit in contrast to alternate methods, especially for shales with intermediate plasticity (Eid, 2006). However, the *PL* was found to be relatively insensitive to the sample preparation procedure.

(which may be pivotal in some civil engineering applications). Testing by Morgenstern and Eigenbrod (1974) found a correlation between slaking of clay shales and *LL*. However, most experimenters have found little apparent correlation between the durability of a rock and its swell potential behavior (e.g., Hopkins and Dean, 1984).[15] Drying the rock changes the fabric of the clay minerals, will induce negative pore pressures, and can induce microcracks. As discussed earlier, swell is a function of the original water content and the hydration path, which are not assessed in this test. Also, any swelling of the rock in the water bath will also tend to separate and destroy the samples, resulting in low slaking indices. Despite these limitations, some authors have used slake durability (together with other parameters) to assess swell (e.g., Shakoor and Sarman, 1992).

3.1.3 Free Swell Test (Also: Reactivity Test)

As suggested by the test title, for a free swell test, a rock sample is immersed in a fluid and allowed to deform/expand without a significant applied load [16]. Before testing, the rock sample (cylindrical or cubic) is prepared and heated to determine the dry density, and typically mounted with metal monitoring point. For a uniaxial test, the sample is subsequently instrumented to measure expansion along the vertical axis (often using a dial gauge), and immersed unconfined in a water/fluid. Displacement (expansion) is recorded with time until it reaches an asymptotic value. The measured orientation of the expansion is typically recoded perpendicular to the bedding plane.

A three-dimensional (3-D, or triaxial) free swell test has also been developed as illustrated in Figure 6. The sample is fashioned into a rectangular cuboid (box), and expansion is measured laterally along three axes with two lateral measurements in addition to the axial measurement as in the uniaxial free swell test.

The uniaxial and triaxial free swell tests are discussed by various authors (e.g., Duncan, 1969, Lama and Vutukuri, 1978; Franklin and Dusseault, 1989; Santos et al., 1997; Madsen, 1999; Rowe, 2001; Skippervik, 2014) and a standard test method has been proposed by the ISRM (ISRM, 1979).

In review, one major drawback of the test method is that the sample can fail or disintegrate during the test due to deformation, invalidating results, as identified by Pimentel (2015). In addition, for the uniaxial version of the test, only one axis of deformation is monitored, while the rock can be expected to deform differently perpendicular and parallel to bedding. Another concern is the fluid used for hydration, typically distilled water, which may not induce response representative of in situ behavior. As a theoretical limitation, the results of the test only provide an estimate of the potential for swell of the rock rather than an assessment of the field response. The specimen does not experience a representative field stress, and therefore the displacement is maximized, rather than reflecting field response. It is also inferred that the aspects of sample

[15] Some authors report a good correlation between slaking and certain clay minerals that contribute to swell (i.e., mixed-layer illite-smectite and montmorillonite), e.g., Dick and Shakoor (1992).

[16] In some applications, a small “seating” load (on the order of 10 kPa) is applied to ensure good contact between the measurement instrument and rock.

disturbance such as drying and the existence of microcracks may also be overlooked in preparing the sample, which can affect apparent swell response.

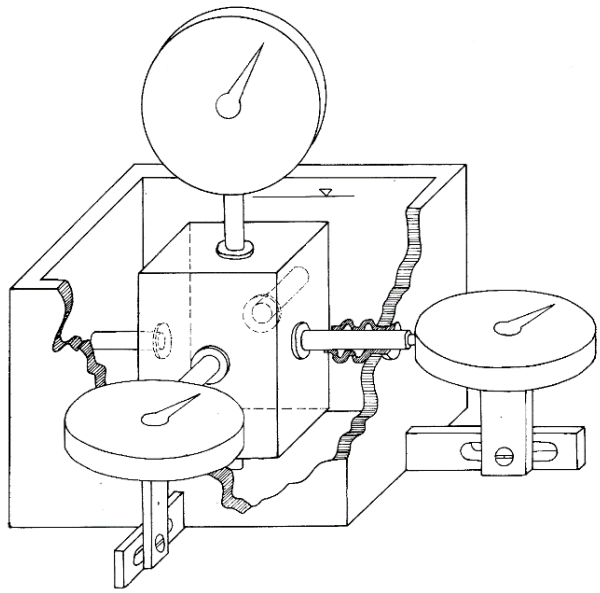

Source: Lama and Vutukuri (1978)

Figure 6: Sketch of the 3-D (triaxial) free swell test apparatus.

3.1.4 Oedometer Test (Ring Test; Semi-Confined Swell):

This swell test uses a short cylindrical specimen which is constrained to swell in only one direction by preventing lateral deformation. The sample is fitted into in a metal ring, axially loaded, and then saturated in water and allowed to swell. Deformations and/or loads are then monitored. The test has been used by a number of researchers for swell testing (e.g., Madsen and Vonmoos, 1985; Franklin and Dusseault, 1989; Madsen, 1999; Rowe, 2001; Ferrari and Laloui, 2013; Bryan et al., 2013; Pimentel, 2015). A test procedure for this approach has been proposed by the ISRM for testing rock (ISRM, 1979), and by the ASTM for testing soils (ASTM D4546).

This test employs an oedometer, a device developed by soil mechanics for consolidation testing to simulate one-dimensional (1-D) deformation and drainage conditions (Figure 7). For swell tests, the axial load applied to the specimen in a number of fashions, providing flexibility to the experimenter. The load applied can be minimal, representing a free swell test. The load can also can be maintained at a constant value to represent in situ conditions. Further, the load can be controlled to maintain zero axial deformation (a “zero-volume-change” test) (e.g., ISRM, 1979). Conversely, the high axial load can be first applied and then reduced in stages, pausing after each stage to allow the deformation rate to decrease sufficiently (to essentially stop) at the selected stage to describe a pressure-deformation curve.

While a more flexible approach than the free swell test, the use of the oedometer still has a number of limitations in material testing. Preparing the sample to fit within the apparatus can be time-consuming and may subject the sample to some disturbance, especially for stronger rock units. It is also problematic to get a tight lateral fit during preparation for soft rock, leaving gaps

along the periphery and creating a non-uniform boundary condition. Testing at a minimal applied stress or using high applied loads provides only an assessment of swell potential. Using a representative vertical load in the cell does not replicate in situ conditions, as the lateral stress in the field can be substantially larger than the vertical stress. Also, the application of too large a vertical load can damage the sample as noted by Pimentel (2015). The test is also subject to the same concerns of sample disturbance noted for free swell tests.

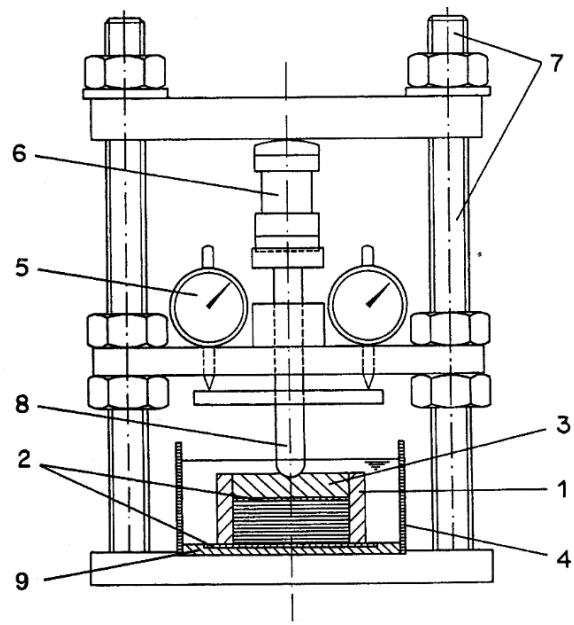

Fig. 1. Apparatus for measuring the axial swelling stress: (1) stainless-steel ring, (2) porous metal plates, (3) stainless-steel loading plate, (4) container, (5) dial gages (attached to the bottom of container (4), attachment not shown), (6) load measuring device, (7) rigid frame and (8) loading piston, (9) stainless steel plate.

Source: Madsen (1999)

Figure 7: Oedometer swell test.

3.1.5 Uniaxial Swell Test

The standard uniaxial compression test (e.g., Hawkes and Mellor, 1970; Aker et al., 2013) is often used for strength testing of rock, and has been used to measure swell under a constant applied load (Zhang et al., 2010). In this application, the axial load is applied to the sample and then saturated by immersing the sample in water/fluid (as illustrated in Figure 8). Axial and lateral deformations are then monitored.[17]

[17] In addition, the strength value from a uniaxial strength test is also used in engineering classification of shales for swell.

Similar to the oedometer test, the axial applied load to the sample can be maintained as a constant or decreased in stages. However, in contrast to the oedometer test, lateral expansion can occur during the test, and this deformation can therefore be monitored. For reference, a standard test procedure has been proposed by the ISRM for general uniaxial testing with deformation monitoring (ISRM, 1999).

In review, this test experiences the same concerns as the free swell test and oedometer-based testing. Sample failure will occur if the applied load is too large, and the sample can fail if the applied load is small and sample expands significantly. Typically, samples are dimensioned to have a 2:1 height to diameter ratio, which requires a larger sample than the prior tests. The test may also require a more-sophisticated test instrumentation as well. Further, the test has not been extensively used in this type of application.

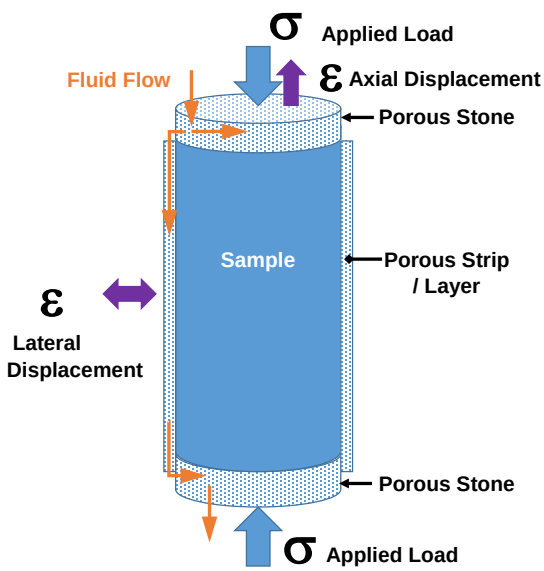

Figure 8: Schemastic of uniaxial swell test.

3.1.6 Triaxial Swell Test

Similar to the uniaxial test, the standard triaxial compression test (e.g., ISRM, 1983b) has also been adapted to measure swell (e.g., Barla, 1999; Santos et al., 1997; Bilir et al., 2004). The triaxial system configuration applies both a lateral and axial load to the sample, permitting more active control of the stress conditions with a cylindrical specimen, a shape typically obtained during in situ sampling (Figure 9).[18]

For swell testing, the sample is first placed in the cell, surrounded by a membrane to isolate the sample from the confining fluid. With one approach, loading is then applied incrementally to rock sample, while concurrently de-airing the pore pressure system using a nonreactive fluid

[18] The system is not a true polyaxial ("triaxial") device as the lateral load is the same in two directions. It is also noted that some experimenters have modified the standard oedometer to apply a lateral load similar to the standard triaxial apparatus (e.g., Dobrowolsky and Vrettos, 2005).

(Santos et al., 1997). Upon reaching the desired deviatoric and confining stress conditions, the sample is exposed to the pore fluid, and deformations are monitored with time. Alternatively, the sample can be loaded (without a fluid) and then the system de-aired using the pore fluid at pressure (a process termed, dry setting, by Barla, 1999). Deformations are then monitored upon introduction of the pore fluid. Typically, samples are dimensioned to have a 2:1 height to diameter ratio to minimize end effects.

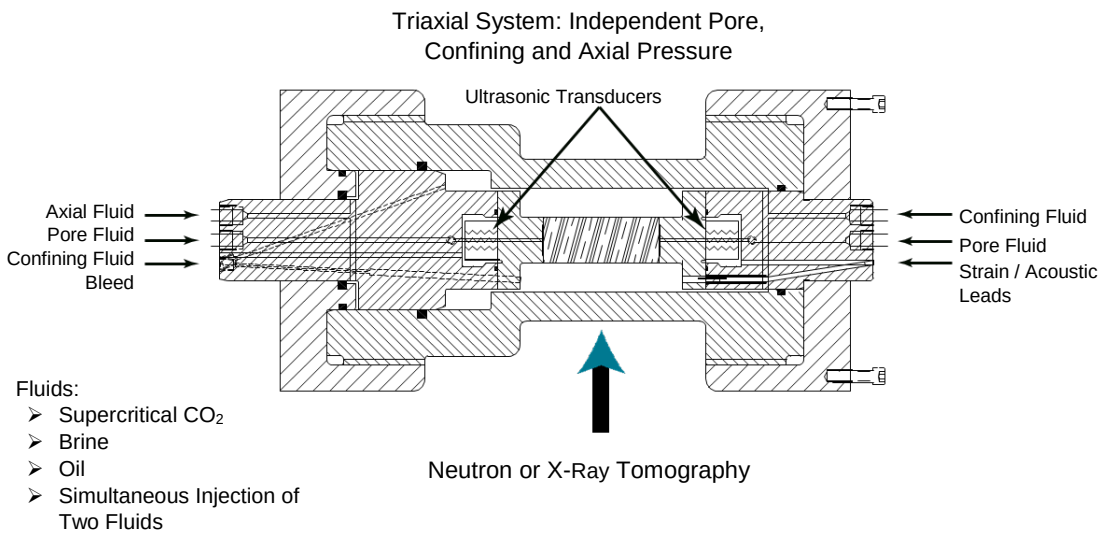

Source: Modified from Carey et al. (2015)

Figure 9: Triaxial system with neutron and X-ray tomography capability.

As in the oedometer test, the applied load can be maintained as a constant or adjusted in stages. The confining pressure is typically maintained to provide a constant stress boundary for a specific stress change. While possible, a zero-volume-change test is typically not performed with this apparatus due to the need to constantly adjust both axial and lateral loads to maintain the volume.

During the test, the pore fluid pressure can also be maintained or altered to provide a specific fluid pressure history on the sample. Recent innovations to the test approach allow the study of sample fabric and the flow of fluids through the sample (including fractures) using neutron and X-ray tomography (Carey et al., 2015), as illustrated in Figure 9. Monitoring of the sample can include sonic velocity measurements.

In review, the triaxial test, while providing a more-controlled environment to study behavior, requires more setup time and effort. The method also requires more-sophisticated testing equipment and monitoring instrumentation than the test methods discussed earlier. Test concerns for triaxial testing are as mentioned for other tests, but also include the increased cost of each test. The test however, does allow the user to apply a stress state similar to that in situ and thereby provide a more realistic environment for studying swell potential. Also, authors have used the system for fracture flow testing, allowing investigations of the effect of gas transport (e.g., CO_2) on fractures. Temperature control is also an option with this type of system (e.g., Yukutake and Shimadaj, 1995). Issues on sample disturbance apply to this system as discussed earlier.

3.1.7 Hollow Cylinder Test (Biaxial Test; Borehole Collapse)

Confined testing using a hollow cylinder configuration has been performed in recent years to determine the mechanical response of rock (e.g., Chen et al., 1998; Talesnick and Ringel, 1999). The test configuration is a more-representative simulation of conditions near a borehole by providing a central hole for loading the sample, as illustrated in Figure 10. It also permits the application of different stress conditions than in a standard triaxial test, either by varying the pressure in the inner hollow or by applying a torsional shearing load to the top and base of the sample (as shown by Talesnick and Ringel, 1999). The hollow cylinder method has also been used to measure shale swell (e.g., Sherwood and Bailey, 1994; Monfared et al., 2011).

In studying swell expansion and pressure, the test allows faster and more complete saturation of the rock matrix then either a uniaxial or triaxial test due to the reduced dimension of intact rock and by the introduction of fluid in the central hollow. Stress conditions are applied axially (by a loading ram), laterally by the external pressure in the pressure cell and internally by the fluid in the central hollow, allowing for several differing load configurations.

The disadvantages of the approach are the increased handling and preparation of the sample to drill the central hole (which can damage the sample), the need for a larger sample size to accommodate the configuration, and the requirement for more-sophisticated testing equipment and instrumentation[19]. As for other tests, issues on sample disturbance apply, especially in light of increase preparation efforts.

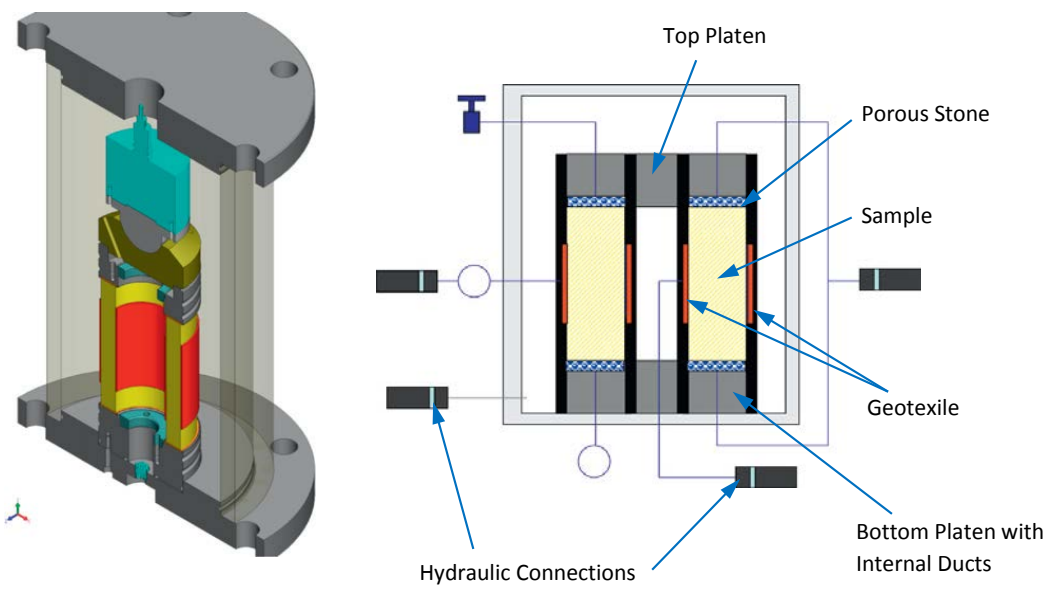

Source: Modified from Monfared et al. (2011)

Figure 10: Example of hollow cylinder test configuration.

[19] Instrumentation is to apply differing loads and to measure response in the central hole.

3.1.8 Other Test Methods

Other methods that have been applied in studying the behavior of shale including non-destructive petrophysical methods, such as X-ray diffraction analysis and X-ray fluorescence analysis (for quantitative mineralogy), cation exchange capacity (CEC, for clay chemical reactivity), mercury injection capillary pressure (for porosity and pore throat distribution), together with imaging techniques including scanning electron microscopy and X-ray computed tomography, and the measurement of dielectric properties and ultrasonic wave velocity measurements[20], as discussed by Josh et al. (2012).

Other index testing has been employed to study shale response including: (a) indentation testing; (b) abrasion (scratch) testing; and (c) fluid penetration testing as reported by Guo et al. (2015). A hollow cylinder test system with circulating drill fluid (wellbore stimulator) has been constructed by Guo et al. (2015) to evaluate effects under downhole pressure at 3,000 m (10,000 ft) deep and temperatures up to 135 ºC [21]. Triaxial core-flooding experiments with CO_2 are also being performed (Sun et al., 2015).

To examine the effect of CO_2 on the microfabric of shale, specialized oedometers have been constructed to incorporate neutron beam scattering technology to observe shale response to $scCO_2$ (Bryan et al., 2013). The test cell is shown in Figure 11, and incorporates two portals through the cell wall to observe response with the neutron beam.

Several more-novel testing approaches have directly involved CO_2. Acoustic monitoring has been conducted to study fracturing induced by liquid CO_2 and $scCO_2$ injection under pressure. Testing of fracture response of granite was conducted using a triaxial cell and cubic specimens[22] with a central hole for injection (Ishida et al., 2012). The recorded acoustic emissions sources with CO_2 injection tracked the fracture formation and were distributed across a larger area and were more distributed than with water injection.

An experimental investigation of the effect of CO_2 injection on the electrical conductivity of water bearing porous media was performed to develop methods to monitor CO_2 during sequestration (Börner et al., 2013). Results of lab testing with a fine to medium grained quartz sand medium indicated a decrease in electrical conductivity by a factor of up to 33 for CO_2 displacing pore water at pressures up to 13 MPa and temperatures up to 40 °C.[23]

Another experimental program investigated the electrical properties of shales during drying across frequency range of 5 Hz to 1.3 GHz as report by Adisoemarta (1999). Samples from Pierre and Wellington shales were prepared, dried, rehydrated, de-aired and then allowed to dry while measuring electrical properties using both the parallel plate and open-ended coaxial probe

---

[20] P and S wave velocities can be related to desiccation of shale, as demonstrated by Ghorbani et al. (2009).

[21] Initial tests with shale sandstone and limestone were conducted, but results were not reported in this report. Authors did not provide maximum pressure value of system.

[22] External loads were applied with flat jacks and the central cavity was pressurized with a special packer.

[23] Liquid and supercritical CO_2 alone exhibit no relevant conductivity at pressures up to 13 MPa and at temperatures up to 50 °C.

techniques. The study indicated that effects on moisture decrease on the shale are most evident at lower frequencies, and it was determined that shale will generate a direct electrical current under stress.

In review, these test methods are promising and provide further insight into shale response, but have not yet demonstrated a correlation to swell response.

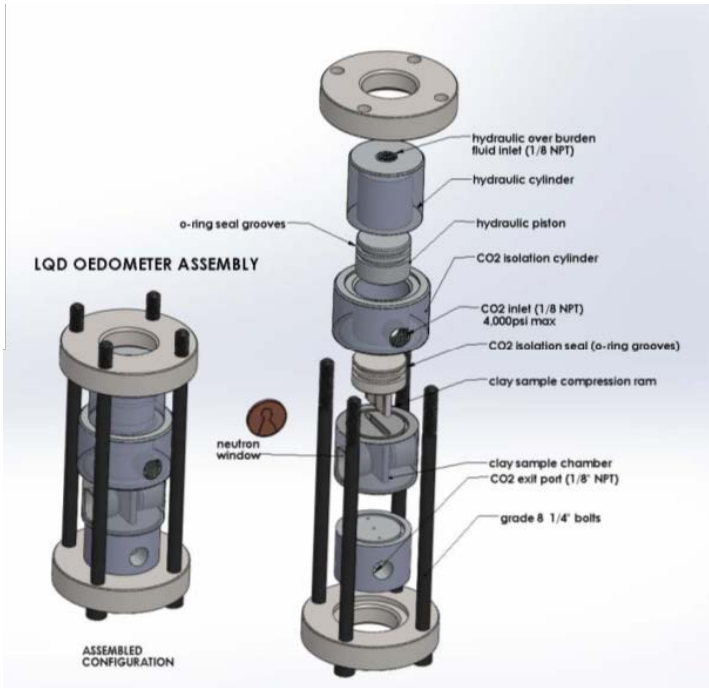

Source: Bryan et al. (2013)

Figure 11: Stainless steel/aluminum oedometer using small angle neutron beam scattering to observe caprock swell with supercritical CO_2.

3.2 SAMPLE DISTURBANCE AND SAMPLE STORAGE

As a basis to predict field response, "undisturbed" samples are required to be used in the laboratory. The term, undisturbed, can suggest that such samples are in the same condition as in situ, but this is a false notion, as no rock sample is completely unaltered[24]. Rather, the term is used to describe samples which are to some extent altered, but are still sufficiently representative of in situ conditions so that the data obtained from them can be directly used in design without question.

Unfortunately, the assumption of an undisturbed sample is used too generously in experimental work as a number of factors can affect a shale response. In addition to sample disturbance

[24] Rock core is damaged (to some degree) by several processes before it reaches the surface: 1) by the drilling process itself, which can induce microcracking and core breaks; 2) by the invasion of drilling fluids into the core; 3) by the loss of in situ gases and fluids; and 4) by depressurization from in situ pressure to the drilling fluid pressure.

downhole, the simple process of bringing the sample to the surface itself depressurizes the core, which can alter the sample fabric. Further, the sample is typically extensively handled at the surface and re-aligned, placed in core boxes, and transported to a laboratory, all of which can also alter the sample condition, despite the robust appearance of the core. Perhaps not as obvious, the sample environment and sample storage containers are also of major significance to sample disturbance with respect to the response of clay minerals. The moisture content of shale is readily altered when exposed to the atmosphere, and studies have shown shales must be preserved at their native water content if accurate physical measurements are to be made.

Ewy (2015) studied shale and claystone response to quantify the impact on shales and claystones response to exposure to air and different liquids. He noted that loss of water in a shale, if significant, can cause shrinkage cracks and compromise subsequent testing. In addition, exposure to water will reduce negative pore pressures in the sample, allowing the sample to expand and change structure. The author strongly recommended two requirements to maintain an undisturbed sample: (1) the exposure to air be minimized; and (2) the contact with water or brine must be prevented (unless introduced under stress during testing).

Testing by Chenevert and Amanullah (2001) has shown that swelling response differs between disturbed and undisturbed rock samples. Shale samples from depths of approximately 1,370 m below the North Sea indicated that swell of restored samples (i.e., samples disturbed by hydration or dehydration) versus preserved (undisturbed) samples differ significantly, indicating some irreversible change to the shale matrix. Disturbed samples also tended to experience excessive swelling compared to cores kept at their native water content. In this case, undisturbed samples were drilled with a palm-oil ester-type mud and an immediately sealed in tubes (with synthetic oil) after reaching the surface to limit moisture content changes.

Testing by Santos et al. (1996) indicated that the original shale water content apparently plays an important role when samples are exposed to water, and that sample response is directly affected by moisture loss. Some samples were observed to crumble upon drying. The authors also found that sealing samples in paraffin may not be sufficient to prevent moisture loss of samples and recommended the immersion of samples in a mineral oil immediately upon retrieval and thereafter, and whenever possible during sample preparation to prevent moisture content change. The oil apparently did not affect response.

Recent developments in drilling now permit core sampling that retains core fluid at the time of sampling. Some of these systems also maintain the sample pressure at depth (pressurized core sampling or pressure coring), while others allow the pressure to dissipate (pseudo-pressure systems) (e.g., Kuhlman et al., 2015). These types of sampling can be performed during drilling operations (either direct or wireline methods) or after hole completion, using sidewall drilling systems (e.g., Halliburton, 2014). In either case, use of these new systems isolate the core from the drilling fluid, reducing fluid invasion. Further, the pressurized systems can significantly limit stress-disturbance factors (such as microcracking). Obviously, the use of these methods will incur additional cost, and may require special handling operations at the surface, but they significantly limit core damage and provide a more representative sample. In addition, ancillary methods have also been developed to maintain the core pressure until the start of laboratory testing, further restricting damage (Priest et al., 2015).

3.3 CURRENT TEST LIMITATIONS AND RECOMMENDATIONS

3.3.1 Observations

A variety of test methods have been employed for characterizing the behavior of mudstones when hydrated, i.e., for rock swell. The tests provide a range of controls in examining rock response and provide insights into swell mechanisms. However, each of these tests has limitations in implementation, and the test method itself can affect the observed swell behavior. In utilizing a specific test, it is fundamental to understand the key assumptions and limitations underlying the selected test method to correctly interpret data. None of the existing test methods alone is adequate to fully characterize swell in the field, but rather, it takes a comprehensive test program to predict field response. There is substantial room for improvement in existing technology and for developing new methods for testing in this area.

As discussed, there are various issues with the listed test methods. The more novel methods available to characterize shale have not been systematically applied to the study of shale response, especially swell. In addition to the equipment, test methodology has seen little progress, especially for advanced systems. Temperature control can also be a significant issue in swell, but is seldom discussed in the literature. Consideration of a comprehensive test approach to characterizing the swell of a rock unit is also absent.

It is also important to know the extent of damage (sample disturbance) of the samples used in such tests. Aside from index testing, most tests are to be conducted samples that are assumed to be “undisturbed,” and that the fluids introduced during the test are to be representative of in situ conditions (simulating the pore fluid). Unfortunately in many cases, prior to testing, the samples are not stored properly and allowed to significantly dry out, which can disturb the shale structure. In addition, some experimenters in the past have used denatured water, which can also significantly alter response due the differing electrolyte balance between the water and the sample fluid. There are also concerns about replicating in situ pressure/temperature conditions, an issue that cannot be addressed in simpler laboratory tests.

3.3.2 Recommendations

On test implementation - Of the tests listed, the hollow cylinder test system appears to hold major promise but has not seen extensive use. It is recommended that this test system concept be further developed and issues such as swell and borehole stability be investigated with large samples. Consideration should be also be given to the use of true-triaxial (polyaxial loading) systems in light of the anisotropy of swell. Other nondestructive measurement systems should be further investigated and developed as possible methods to monitor swell response. Temperature-control and recording should also be included in future test systems to allow for the study of temperature-dependence in swell.

On sample disturbance - It is recommended that a test program be conducted to characterize the effects of depressurization on the geomechanical properties and the swell response of shales. This would require special sampling methods as well as the use of special equipment and test cells that preserve the sample stress state from sampling to testing. This testing would be conducted at representative stress conditions in the lab, and the obtained response should be compared to field response, i.e. the measured borehole closure in the field with time.

On a related topics - It is also recommended that the development of microcracks in shales be studied during de-pressurization from in situ pressures. This testing can be conducted using X-ray scanning and other techniques to understand basic fabric changes. A final recommendation for testing is the requirement for the careful characterization of test samples to be included as part of all standard tests and test methods.

4. EXPERIMENTAL EVIDENCE ON SWELLING DUE TO HYDRATION

4.1 SWELL POTENTIAL VERSUS ACTUAL SWELL

As a basis to a review of the swell response of shale to CO_2, the extensive literature on shale and clay swell response to water solutions is first summarized in the following subsections. There have been numerous efforts to correlate the expansive response of various clays and shales upon hydration. These studies have examined the response of clay minerals alone, compacted (artificial) soils, natural clay samples, and intact mudstone samples.

Some simple and complex relationships have been proposed to correlate swell with various index property values and tests. The intent in reviewing these studies here is *not* to identify an optimal numerical relationship or best fit of parameters to predict swell, but rather, it is to identify the key factors important to the swell potential of mudstones upon hydration. These key factors will provide an increased understanding of shale response, which can then be extended into the examination of direct testing data of CO_2 effects on shale.

Prior to discussing efforts to correlate laboratory tests with the swell, it is important to clarify what these correlations actually represent. The numerical correlations in the literature provide an assessment of the *swell potential* of the material (i.e., the amount of swell that results from a specific test method) rather than a prediction of the actual amount of swell that can occur in the field. As mentioned by Seed et al. (1962), the actual amount of swell experienced in a specific case is a function of the factors describing the particular conditions involved, both intrinsic and external. As an example, Seed et al. (1962) cites a laboratory sample compacted of 20% water content that experiences significant expansion/swell, whereas, the same soil material exhibits little if any expansion compacted at a water content of 27%. Therefore, the material may have the *potential* for expansion, but under specific conditions, the potential is not realized.

Seed et al. (1962) identifies a number of parameters important to swell for his testing, dividing them into two groups: (1) intrinsic factors (internal to the material) and (2) controlled or environmental factors. The second group is important to dictating the amount of swell while the first group identifies the nature of the soil particles and the general potential for swell (see Table 2). This table provides a list of factors originally developed for compacted soils and will be revisited to identify factors related to shale after examining the range of correlations.

4.2 CORRELATION STUDIES - HYDRATION OF CLAYS AND SHALES

4.2.1 Swell of Clay Minerals and Clays Due to Hydration

In discussing the swell of clay minerals and clay soils, many factors that occur in a shale fabric due to lithification are not considered. Simply, a shale is not clay. But these studies of clays can indicate important factors that should be considered in evaluating mudstone response.

4.2.1.1 Clay Mineral Response

There have been a number of studies on clay mineral swell demonstrating that clay minerals swell correlates with water content and applied load. More recent correlation studies include the following.

Thakur and Singh (2005) studied powered samples of montmorillonite and bentonite minerals and correlated the sample pore pressure determined by capillarity (suction) with the measured swelling pressure. The powered samples were mixed with highly purified water[25], and compacted in an oedometer. The samples were then hydrated to assess vertical swell. After reaching a maximum swell value, the samples were then loaded in stages until the initial vertical deformation value before hydration was restored. Swell response was time-dependent and samples took approximately 2,000 min (over 30 hrs) to achieve final swell values.

Table 2: Factors Influencing the Swelling of Compacted Clay Soils from Seed et al. (1962)

Group	Parameters	Effects
1: Intrinsic Factors	1. Type of Clay Minerals in Soil 2. Amount of Clay in Soil	• Determine the Swell Potential • Depend on Nature of Soil Particles • Can be Determined by Laboratory Classification Test
2. Controlled/Environmental Factors	1. Structure of Soil 2. Dry Density of Soil 3. Water Content at Compaction 4. Method of Compaction 5. Availability of Water 6. Electrolyte Concentration in Water 7. Surcharge Pressure	• Determine the Extent to which Swelling Potential is Realized (Amount of Swell) • Depend on Compaction • Depend on Environmental Conditions • Cannot be Determined by Laboratory Classification Tests

Source: Modified from Seed et al. (1962)

The correlation between the suction and swell pressure tended to increase nonlinearly, with pressure increasing with the log of sample suction. The suction also decreased linearly with increasing initial molding water content of the sample.

Schanz and Tripathy (2009) studied divalent-rich Ca-Mg-bentonite using zero-volume-change oedometer tests. The soil contained approximately 80% of montmorillonite. The samples were recompacted into an oedometer, restrained in the cell to prevent vertical deformation and then the sample was hydrated. Pressure was measured until reaching an asymptotic, final value. Swell response was time-dependent and samples took on the order of 1,000 min (over 15 hrs) to achieve a final swell pressure value; in addition, the time to the final value increased with sample

[25] Distilled water was subjected to a purification process involving successive steps of filtration and deionization to achieve a purity characterized in terms of resistivity; the final fluid is termed “Millipore water” after the Millipore Corporation which originally created the filters and filtration process.

density. Comparison of experimental results with proposed theory provided a good correlation for lower densities, exhibiting a general linear trend of gradual increase in swell pressure with density, up to dry densities of 1,550 kg/m^3. However, above sample densities of 1,550 kg/m^3, a distinct increase in the slope of swell pressure with increasing density occurred, which deviated significantly from the theoretical prediction.

4.2.1.2 Compacted (Artificial) Soil Response

Studies with compacted samples have examined the effect of various parameters on swell. Some of these studies are included here.

Seed et al. (1962) conducted a number of tests on clay soils, artificially prepared in the laboratory. The samples were mixtures of sand and bentonite, illite, and kaolinite to establish a wide variety of sample characteristics; testing was conducted to establish a relationship between the percentage of clay size particles, together with a modified activity index parameter[26], with the expansion of the material compacted at optimum water content and maximum density. The relationship (shown in Figure 12) indicates a nonlinear trend of amount of expansion with activity and clay size fraction (i.e., percent grain size finer than 0.002 mm).

In the relationship, there is a strong correlation of increasing expansion with increasing clay activity especially at a clay percentages greater than 30%. This relationship is more gradual below 30% clay percentage, and essentially is absent at material with less than 10%. In contrast, expansion shows a strong relationship with clay fraction for activity values above values of 1.0, and remains significant at an activity above 0.8.

In discussing the relationship further, the author also identified a strong relationship of swell expansion to *PI* alone, and identified an applicable equation as well. Also, pure bentonite samples swelled more than pure illite samples which in turn swelled more than pure kaolinite ones.

Nayak and Christensen (1971) tested artificial soil samples by mixing silica sand together with kaolinite, grundite, and bentonite in various proportions in order to obtain a sufficient variation in the clay content, consistency limits and moisture content. Sample *PI* values ranged from 23% to 110%, and the *LL* varied from 41% to 129%, and clay content from 23% to 59%. Samples were mixed in distilled water, compacted to the desired density, and allowed to equilibrate; thereafter, the samples were hydrated. For swell expansion testing, samples were allowed to swell vertically under a nominal pressure (0.007 MPa), while for swell pressure tests, the samples were restrained to zero vertical deformation and the vertical pressure measured.

Correlations were established for swell pressure and expansion with clay content, *PI*, and the initial water content. Comparison with others suggested similar correlation trends, except in the range of higher *PI* for swelling potential and higher activity for swelling pressure.

---

[26] The parameters is a modified Activity factor (*A*') is defined as $A' = \frac{PI}{C-n}$, where *PI* is the plasticity index, *C* is the clay size percentage (fraction), and *n* is a correction factor, in percent. For artificial (compacted) soils, *n* is taken to be: n = 10, while it is suggested that *n* = 5 for natural soils.

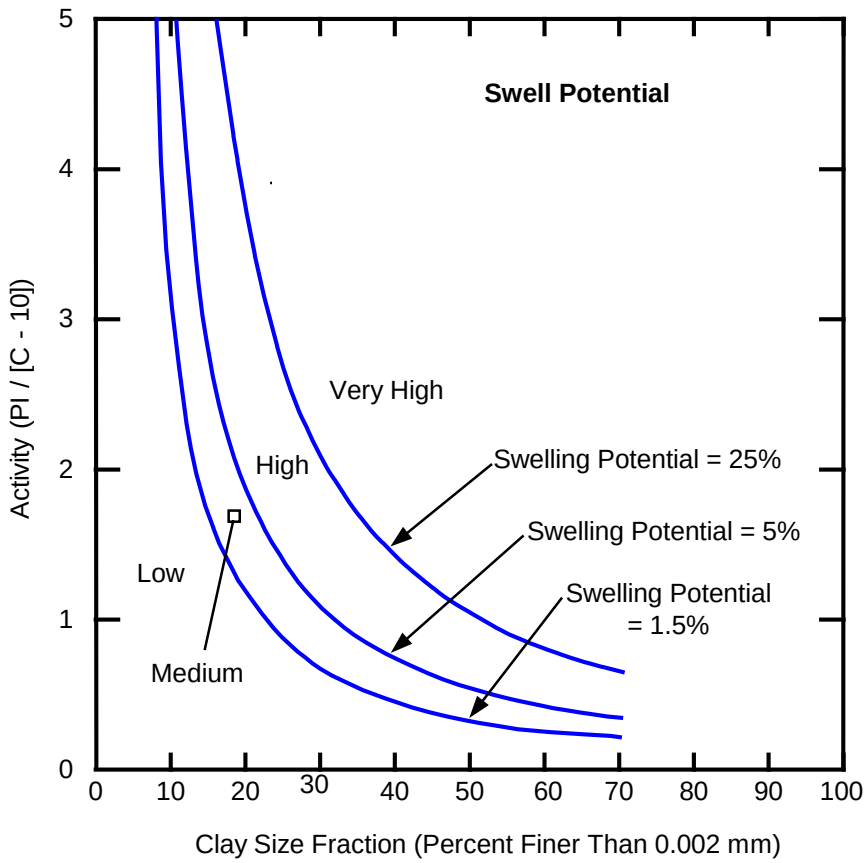

Source: Modified from Seed et al. (1962); data points not shown.

Note: Activity is defined as the ratio of plasticity index (*PI*) to clay size fraction (*C*) in percent.

Figure 12: Proposed relationship of clay content and activity to swell potential of compacted clay samples by Seed et al. (1962).

Brackley (1975) tested recompacted samples of a montmorillonitic clay (a weathered norite) with a *PI* ~ 52 and a *LL* ~ 85 in an oedometer. His earlier testing with this material indicated that under no external load, sample response was controlled predominantly by the original moisture content of the sample, and in contrast, swell pressures by restricting volume change, sample response was a function of density. In this current effort, the author demonstrated that the magnitude of swell under a specific load is dependent upon the original moisture content, the original void ratio and the applied load. For the first two factors, relationships are generally linear in trend. However, with the applied load, there is a linear relationship between the swell deformation and the logarithm of load for the soil at a fixed original moisture content and void ratio.

Muntohar (2006) conducted a multivariate statistical analysis of testing on recompacted soils and other clays using 81 sample points taken from various authors. Muntohar (2006) identified a correlation with swell expansion employing three parameters: 1) clay content (clay fraction); 2) *LL;* and 3) *PI* (Muntohar, 2006). Data values on water content and dry density were excluded from the analyses by the author due to wide variability in these data. Also, statistical analyses with one variable alone provided poorer curve fits for the data.

Djedid and Ouadah (2013), after reviewing a number of correlations for swell, proposed a correlation for the free swelling of consolidated artificial soil. The correlation is based on four variables: 1) dry density; 2) clay fraction; 3) *PI*; and 4) *A* (activity). The database consisted of 35 free swell tests performed at different confining pressure (ranging from 0.1 to 0.5 MPa). The authors examined various equations and noted that as the number of parameters increased, the mean deviation decreased, thereby increasing the goodness of fit. They also concluded that it is difficult to generalize this relationship to other types of samples.

4.2.1.3 Natural Clay Response

The U.S. Army (1983), looking at varying correlations, indicated that *LL*, *PI*, the surcharge pressure on the soil stratum, the initial water content and the natural soil suction are potential indicators for swelling soils. For field symptoms of swell, they identified desiccation cracks, plasticity, slickensides, and texture as visual signs (U.S. Army, 1983). The U.S. Army also identified several other empirical studies, also correlating swell with *LL*, *PI*, soil suction and water content (U.S. Army,1983). Other authors in discussing natural soils have proposed correlations of *PI* values with clay swell potential (e.g., Williams and Donaldson, 1980; Chen, 1988; Holtz et al., 2011) as listed in Table 3. Holtz et al. (2011) also included the *SL* in their swell correlations. Further, O'Brien and Chenevert (1973) have correlated observed clay sample response with the predominant clay mineral (Table 4).

van der Merwe (1964) developed an empirical equation to provide a more accurate representation of field response. The correlation relates *PI* and the clay content of the whole sample together with a depth factor (to account for pressure below grade) to foundation swell (see Figure 13).

The relationship was developed for single story structures in South Africa. Unfortunately, as reported by Williams and Donaldson (1980), the approach has not always been successful when applied elsewhere with different soil conditions. The method was modified by van der Merwe (1975) to adjust the transition from one swell category to another, using clay activity (*A)* as a bound (as shown in Figure 13).

Table 3: Other Proposed Relationships of Plasticity Index of Expansive Soils

Classification for Expansion	Plasticity Index of Whole Sample		
	Proposed PI Range from Williams and Donaldson (1980)	Proposed PI Range from Chen (1988)	Proposed PI Range from Holtz et al. (2011)
Low	≤ 12	≤ 15	≤ 18
Medium	(> 12) to 24	10 to 35	15 to 28
High	(> 24) to 32	20 to 55	25 to 41
Very High	> 32	> 35	> 35

Source: Modified from Williams and Donaldson (1980), Chen (1988), and Holtz et al. (2011)

Table 4: Field Behavior versus Clay Mineral Type

Class	Characteristics	Clay Minerals
1	Soft, Highly Dispersive (Gumbo); Mud-Making	High Smectite, Some Illite
2	Soft, Fairly Dispersive; Mud-Making	High Illite, Fairly High Smectite
3	Medium Hard, Moderately Dispersive, Sloughing	High in Mixed-Layer, Illite, Chlorite
4	Hard, Little Dispersion, Sloughing	Moderate Illite, Moderate Chlorite
5	Very Hard, No Dispersion, Caving	High Illite, Moderate Chlorite

Source: Modified from O'Brien and Chenevert (1973)

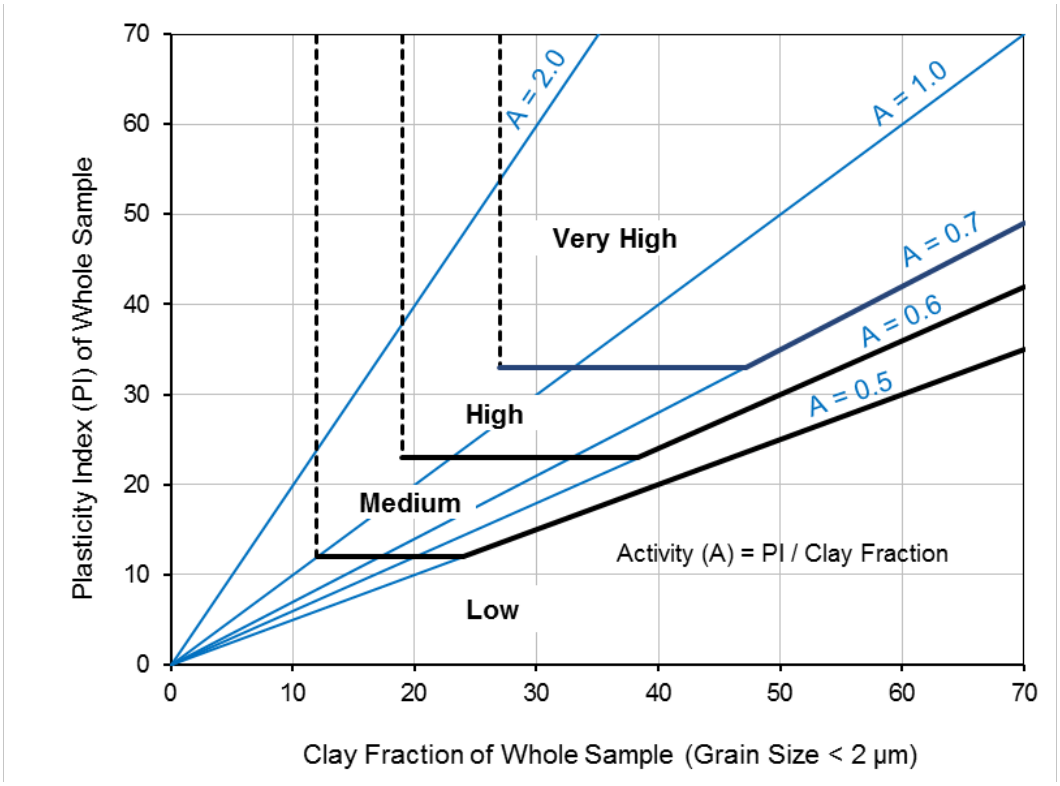

Source: van der Merwe (1975), as shown by Williams and Donaldson (1980)

Figure 13: Proposed empirical relationship of clay content and *PI* to categories of clay soil swell by van der Merwe (1975).

Yilmaz (2006) conducted a review of a number of proposed correlations for classifying soil swell. These correlations included relationships based on single and multivariate relationships with various index parameters. These relationships included factors such as *LL* (e.g., Table 5), *PL*, *PI*, *SL*, shrinkage index[27], liquidity index[28], clay fraction, clay activity, water content, maximum dry density, expansion index[29], and CEC.

In addition, the authors conducted oedometer free swell tests on 141 undisturbed samples with a nominal load of 0.0068 MPa, and a sample radius of 5.0 cm. The source and depth of samples, however, were not reported.

Based on these tests, the authors correlated *LL* and CEC with free swell expansion, S_w, described as:

$$S_w[\%] = (0.155 \times LL) + (0.0076 \times CEC) - 2.04 \quad (1)$$

Using this relationship and a defined swell potential zones (Table 6), the authors constructed a classification chart as shown in Figure 14. This system only corresponds loosely to the limits proposed by Dakshanamurthy and Raman (1973) in Table 5.

Table 5: Correlation of Swell Categories with *LL* by Dakshanamurthy and Raman (1973)

Liquid Limit (LL)	Classification
0 to 20	Non-Swelling
20 to 35	Low Swelling
35 to 50	Medium Swelling
50 to 70	High Swelling
70 to 90	Very High Swelling
> 90	Extra-High Swelling

Source: Modified from Dakshanamurthy and Raman (1973)

[27] The shrinkage index is a derived Atterberg limit, defined as $SI = PL - SL$ where *SI* = shrinkage index, *PL* = plastic limit and *SL* = shrinkage limit.

[28] The liquidity index is a derived Atterberg limit, defined as $LI = {(w_n - PL)}/{(LL - PL)}$ where *LI* = liquidity index, w_n = natural water content, *PL* = plastic limit and *LL* = liquid limit.

[29] The expansion index (*EI*) = percent swell (oedometer test) × (soil fraction passing No. 4 sieve) x 100.

Table 6: Free Swell Limits for Classification by Yilmaz (2006)

Free Swell (%)	Swell Classification
< 1.5	Low Swell
1.5 to 5.0	Moderate Swelling
5.50 to 10.0	High Swelling
> 10.0	Very High Swelling

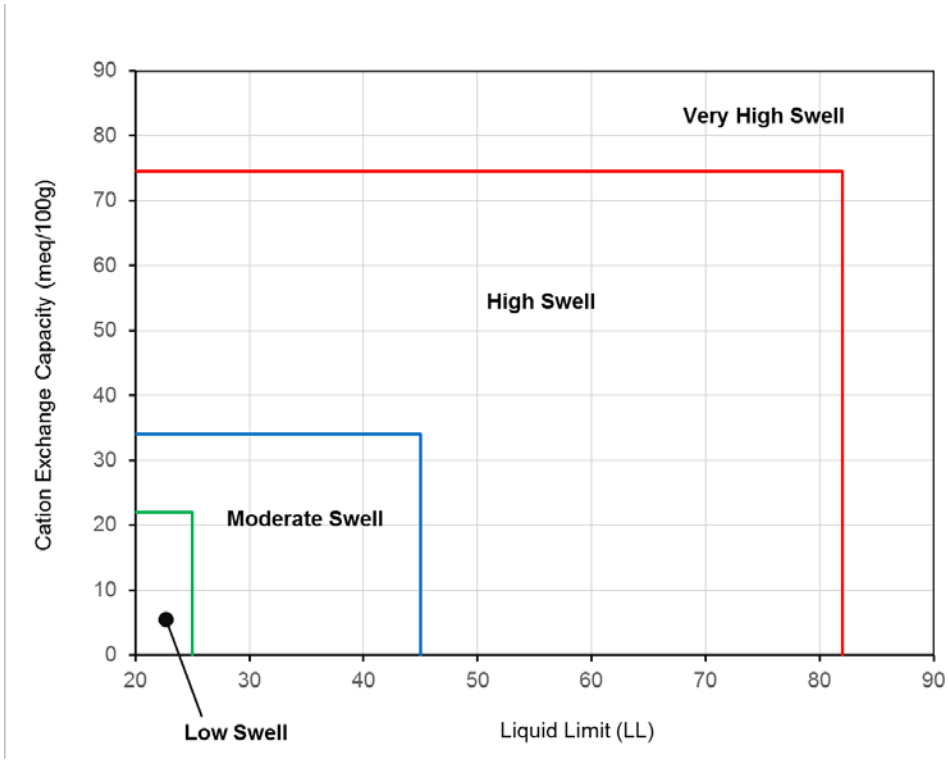

Source: Modified from Yilmaz (2006)

Figure 14: Proposed swelling potential chart based on CEC and *LL* by Yilmaz (2006)

4.2.2 Swell of Shales due to Hydration

There have been several extensive efforts to predict the swell potential of near-surface shales using a combination of index tests and other methods. Some of these studies are described in this section.

Huang et al. (1986) tested five different types of shale from Illinois. Separate free swell and zero-volume-change oedometer tests were conducted on the samples (for a total of ten tests). The samples were prepared by first oven-drying, then rehydrating the shale by placing the samples in differing humidity environments. The samples had *LL* values ranging from 16.4 to 27.0%, *PL* values of 15.7 to 19.2%, and a porosity of 11.0 to 21.6%. Experiments indicated little apparent effect of the differing hydration humidity. Factors that demonstrated a correlation to swell were:

PI, clay content, the configuration of clay particles, and susceptibility to moisture (a durability criterion developed by the authors). In addition, the amount of free swell showed a general linear correlation with the swell pressure. The authors also concluded that tested shales can generate a fair amount of expansive force even with only trace amounts of clay minerals, and that shale without smectite minerals can develop significant swelling pressures. In review of this work, it is noted that the free swell values experienced in this testing were small, all less than 2%. Swell pressures were significant, but all less than 10 MPa, but even the very low free swell samples generated pressures in excess of 2 MPa.

Shakoor and Sarman (1992) conducted a variety of tests on a range of mudstones and performed statistical analyses to determine which parameters provided the best fit. The authors studied 36 samples (together with 6 additional verification samples) from 15 sites in the United States. The samples were tested to determine a number of properties, including: grain size distribution, clay content, clay type, texture, absorption, adsorption, Atterberg limits, specific gravity, dry density, void ratio, slake durability, uniaxial compressive strength, 3-D free swell expansion, and swelling pressure. Properties were determined using ASTM testing methods and samples were disintegrated to determine index properties. A scanning electron microscope was used to study mudrock texture and structure (i.e., size and abundance of voids, degree of microcracking). The study developed a 12-parameter list of values for each rock unit together with clay mineral divisions, and pore volume variables.

Bivariate analyses of the data indicated that the swell expansion and swelling pressure could not be well represented by a single variable. Therefore, a multi-variate analysis was used to correlate with free swell and swell pressure values. Samples were divided into four groups using the classification system of Lundegard and Samuels (1980)[30]. The results indicated that a five-variable correlation was optimal to evaluate potential swell expansion and swell pressure for all samples. The five factors were: 1) absorption; 2) adsorption; 3) second-cycle slake durability; 4) void ratio; and 5) point load strength. A sixth variable, *PI*, was included for claystone and mudstones units (as identified by the authors). For mudshales, a seventh parameter was introduced, *LL*[31].

The authors also provide a correlation between swell pressure and the amount of free swell (Figure 15). The authors concluded that swell in these units can occur over a range of uniaxial strengths, and that larger amounts of swell are not restricted to units containing more-highly expansive clay minerals (e.g., smectite). Further, the process of classifying the units into separate groups was deemed essential to conducting the multivariate analyses.

Sarman et al. (1994) provides an updated analysis of the Shakoor and Sarman (1992) study with the same sample data. However, the revised multivariate analyses identifies only five main (optimal) variables that correlate with swell expansion and swell pressure: 1) absorption; 2) adsorption; 3) second-cycle slake durability; 4) void ratio; and 5) point load strength.

---

[30] Based on particle size and laminations; see Lindner (2016) for description of classification system.

[31] The parameters of specific gravity of solids, dry density, and percentage of clay-size particle (i.e., ≤ 5 μm) were not included in the optimal correlation.

Specifically, the *PI* and *LL* parameters mentioned in the earlier paper were eliminated from the proposed correlations.

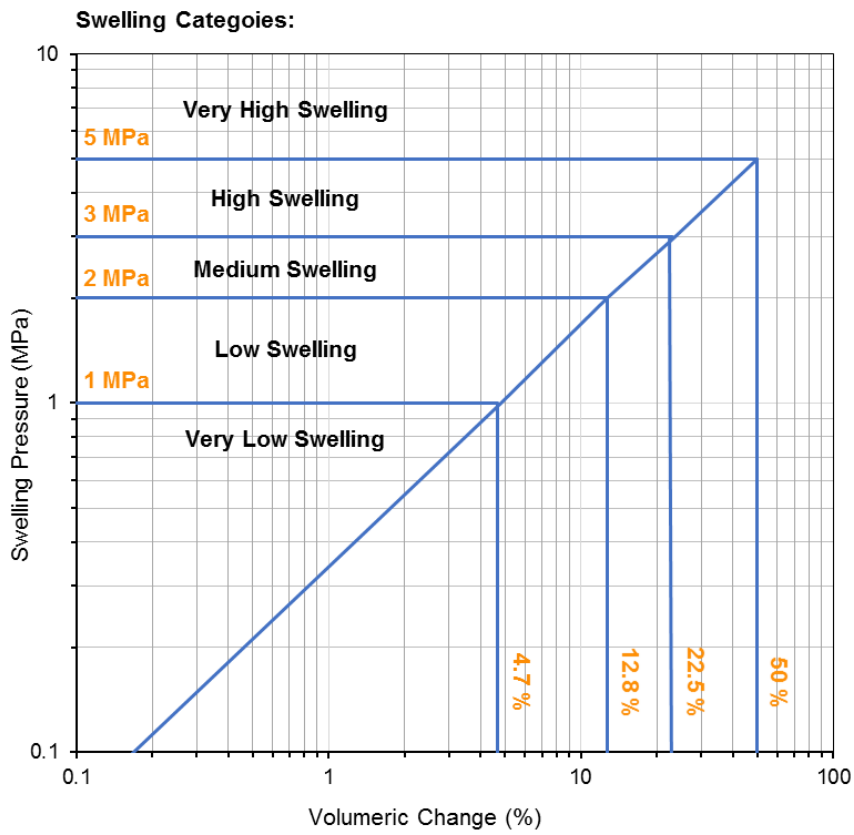

Source: Modified from Shakoor and Sarman (1992)

Figure 15: Definition of swell categories based on swelling pressure and volumetric expansion from Shakoor and Sarman (1992).

Olsen et al. (2000) collected 182 undisturbed samples from 20 sites from Boulder to Pueblo along the Colorado Front Range Urban Corridor. The clay and clayshale samples were taken from shallow depths: 145 samples were taken at 30–50 cm depth beneath the ground surface, and 37 samples were taken approximately 2.4 m (8 ft) beneath the ground surface. The clay fraction of the samples ranged from 0 to almost 100%, and clay mineralogy ranged from pure smectite to varying degrees of mixed-layer smectite/illite and smectite to very low smectite. Illite content was significant in many samples (up to 60% of the clay fraction) with variable but generally minor amounts of kaolinite (typically 10% of the clay fraction but some units varied up to about 50%). Samples were tested for fundamental suction, water content, and volume change relationships based on the scheme by McKeen (1992), originally developed for airport pavements. Additional Atterberg index testing was performed on many samples to compare with Seed's method (Seed et al., 1962) and Chen's correlation with *PI* (Chen, 1988).

Swell tests were conducted using an oedometer, first allowing vertical swell under a nominal load and then applying vertical loading until the initial void ratio was obtained to determine the swell pressure. As for results, the input variables (such as *PI*) did correlate with the amount of smectite, with correlation coefficients in the range of 0.6 to 0.75 (Olsen et al., 2000). However, the percent swell and swell pressures did not exhibit a direct correlation with the total percent smectite (Olsen et al., 2000), and the three methods appear to be poor indicators for swell of these samples. The authors attribute this result due to other factors (such as the initial moisture content, stress history, and surcharge loading), which are not included as factors in the study.

Gomez-Gutierrez et al. (2011) tested ten compacted shales and two over-consolidated clays from different formations in Kentucky. From results, the authors note that the factors of clay fraction (from a sieve analysis), the original water content, the amount of absorbed water and LL generally correlate with free swell, but other factors such as *PI*, liquidity index (*LI)* and consistency index (*CI*)[32] did not show reliable correlations. Slake durability also showed no obvious correlation. However, a correlation is proposed by the authors between free swell and a composite factor, *durability ratio*, *H* (the square of the ratio of the slake durability to the clay fraction). The data for all samples appear (visually) to show some correlation to this factor, but no goodness of fit data is provided in the paper. In addition, based on consolidated undrained triaxial tests, the effective critical state friction angle was calculated. This friction angle was also proposed to correlate well with free swell, but the fit appears fair to poor in the authors' figure (Gomez-Gutierrez et al., 2011).

4.2.3 Summary of Correlation Studies for Hydration

In review of published correlations, the following points seem evident:

- No single parameter is sufficient to effectively describe swell for mudstones, despite one-parameter correlations established for specific clay minerals or artificial samples
- Various clay minerals can cause swell. The more common minerals, in order of decreasing swell potential are: (1) smectites (montmorillonite); (2) interlayer-deficient micas (illite); and (3) serpentine-kaolin (kaolinite). There are also mixed layers of these minerals. It is concluded that all clay minerals can expand to some degree and the potential for actual material expansion is dependent on a combination of intrinsic factors, not just the mineral type.
- Of importance, the amount of clay content, clay mineral types, and Atterberg limits[33] correlate with hydration swell. It is concluded that Atterberg limits and related indices (i.e., *PI*, *A*, *LL* and *SL*) describe the plasticity and related characteristics of the clay minerals, and are therefore surrogates for describing the type and amount of clay minerals.

---

[32] *CI* is a derived Atterberg limit, defined as $CI = {(LL - w_n)}/{(LL - PL)}$ where *CI* = consistency index, w_n = natural water content, *PL* = plastic limit and *LL* = liquid limit.

[33] The correlation with Atterberg limits and shale swell is not always included in the literature.

- Strength (i.e., unconfined strength, point load strength), and density parameters (dry density, void ratio) correlate with hydration swell. Slake durability has also been employed in some correlations. It is suggested that all these parameters are essentially surrogates for evaluating the rock fabric (including cementation) of the sample.
- Various other factors are also of some importance in swell, including the initial water content, sorption (adsorption and absorption), soil suction, and CEC. In situ stress is a factor in predicting field response.

4.3 FACTORS IMPORTANT IN HYDRATION RESPONSE

4.3.1 Background

From a review of the foregoing, there are several factors that are of importance to response when clay or shale is hydrated. Several authors have proposed to list these factors in a systematic fashion. However, the proposed listings need to be re-tailored in some respects to reflect the swell of mudstones.

As noted earlier, Seed et al. (1962) listed a number of factors in the swell of artificial clay samples (Table 2). In examining these factors, however, it is evident that these factors reflect the construction of the artificial samples themselves. For in situ shales, it is not possible to control the structure of the material, the existing water content or dry density of the unit; these factors are intrinsic to the rock fabric rather than externally controlled by the experimenter.

For a methodology to predict clay swell in the field, the U.S. Army (1983) identifies factors similar to Seed et al. (1962), but includes a number of environmental conditions to describe the availability of water, including: a) climate, b) groundwater, c) drainage, d) vegetative cover, and e) field permeability. They note that swell is time dependent, attributing the time factor due to the availability of water. These conditions reflect many of field-related situations encountered in surface design.

A more-general approach has been taken by Underwood (1967). In discussing the classification of shales for engineering purposes, Underwood (1967) identifies a number of factors that influence shale response in engineering (see Table 7). These items range the gamut from describing the current state of the material (e.g., predominant clay minerals and swell potential) to the current state of the environmental factors and conditions (e.g., state of stress), and includes both microfabric and macrofabric concerns (moisture content versus the orientation of discontinuities).

Table 7: Factors Important to Shale Behavior by Underwood (1967)

No.	Physical Property	Unfavorable Range	Favorable Range
1*	Uniaxial Compressive Strength (MPa)	0.34 to 2.0	2.0 to 34
2	Modulus of Elasticity (GPa)	0.14 to 1.4	1.4 to 14
3	Mohr Envelope: Cohesive Strength (MPa)	0.03 to 0.7	0.7 to Greater than 10
4	Mohr Envelope: Angle of Internal Friction (^{o}) *	10 to 20	20 to 47+
5*	Dry Density (kg/m^2)	1,120 to 1,760	1,760 to 2,560
6*	Potential Swell (%)	3 to 15	1 to 3
7*	Natural Moisture Content (%)	20 to 35	5 to 15
8	Coefficient of Permeability (m/s)	10^{-7} to 10^{-12}	Greater than 10^{-7}
9*	Predominant Clay Minerals	Montmorillonite or Illite	Kalonite and Chlorite
10*	Activity Ratio	Greater than 0.75	0.33 to 0.75
11	Response to Wetting/Drying Cycles	Reduces to Grain Sizes	Reduces to Flakes
12*	Spacing of Discontinuities	Closely Spaced	Widely Spaced
13*	Orientation of Discontinuities	Adversely Oriented	Favorably Oriented
14*	State of Stress at Site	Greater than Overburden	Approximately Equal to Overburden

Source: Modified from Underwood (1967); modifications include changing the values to metric units, excluding the columns on "Probable Engineering Behavior" and showing range values on a single line. In addition, the maximum value of Angle of Internal Friction in the Favorable Range is reduced in the table to reflect current literature values (e.g., Kohli and Zoback, 2013).

* Indicates a parameter considered to directly affect the amount of swell of shale in situ, as identified in this report

For each factor in this table, a range of unfavorable and favorable conditions is identified, but no system or rating method is introduced for shales exhibiting several unfavorable conditions.

For shale swell, Underwood (1967) notes that the presence of discontinuities are identified to be a concern as well as the predominant clay minerals of the shale, activity of the material and the swell potential. The author's observations also indicate that swell in rock units with frequent slicken sides tends to be greater than those units with few discontinuities. Underwood (1967) further notes that: 1) swell is dependent on the external stress; 2) swell can be time-dependent; and 3) swell correlates with the availability of water through the fabric.

However, in addition to the parameters identified in swell correlations (Section 3.2.2) and the factors discussed by Underwood (1967) and Seed et al. (1962), there are other concerns on the swell response, some of which are described in the following sections.

4.3.2 Other Factors - External Fluid Chemistry

In examining the list of factors influencing swell by Underwood (1967) in Table 7, there are other factors that should be included in such a list when in discussing physiochemical swell of mudrocks. In particular, the type of external fluid, the exchangeable cations content and the electrolyte concentration, can have a significant effect on swell. For example, experimental work by Wakim et al. (2009) on Tournemire shale with differing salt solutions clearly shows that the aqueous solution chemistry strongly influences the potential to swell. At the same concentration (1 mol/l), potassium chloride (KCl) had the strongest effect, followed by calcium chloride ($CaCl_2$), with sodium chloride (NaCl) having the least effect, in comparison to a pore fluid of distilled water. However, when the solutions were normalized to the same ionic strength, NaCl had a stronger effect than $CaCl_2$. For all solutions, higher concentrations had a stronger reduction effect on swell. Similar results were obtained on Bringelly Shale by William and Airey (2004), as illustrated in Figure 16.[34]

Testing on mudrock from Shandong Province, China was conducted using various salt solutions, including aluminum chloride ($AlCl_3$), NaCl, and $CaCl_2$ (Chai et al., 2014). The results indicated that $AlCl_3$ solution had a stronger effect than either the NaCl or the $CaCl_2$ solutions. In addition, the testing demonstrated that the degree of the salt effect was noted for the most part chemically path-independent (which was also concluded by Wakim et al., 2009). This demonstrates that the physiochemical swell processes are (to some degree) reversible.

Laboratory testing by Chenevert (1998) on Speeton shale indicated that other salts such as potassium formate (HCO_2K), alcohols (glycerol) and other solutions such as methyl glucoside and NaCl/methyl glucoside can reduce swell (and perhaps induce shrinkage) in contrast to water solution alone.

Testing by Lee and Lo (1993) showed similar results with free swell tests on Queenston shale with a fully-saturated NaCl solution. However, the authors also noted that the salinity of the specimen changed during testing depending on the immersion fluid; for example, testing in

[34] Note that William and Airey (2004), appears to show a more significant effect of NaCl than $CaCl_2$ on swell at the same concentration, while Wakim et al. (2009) shows the reverse.

distilled water indicated that the salinity of the solution increased during the test as the salinity of the sample decreased. In addition the authors noted that free swell tests using fluids such as ethanol apparently induced little or no swelling, and the sample in testing with transmission oil contracted slightly with time (Lee and Lo, 1993).

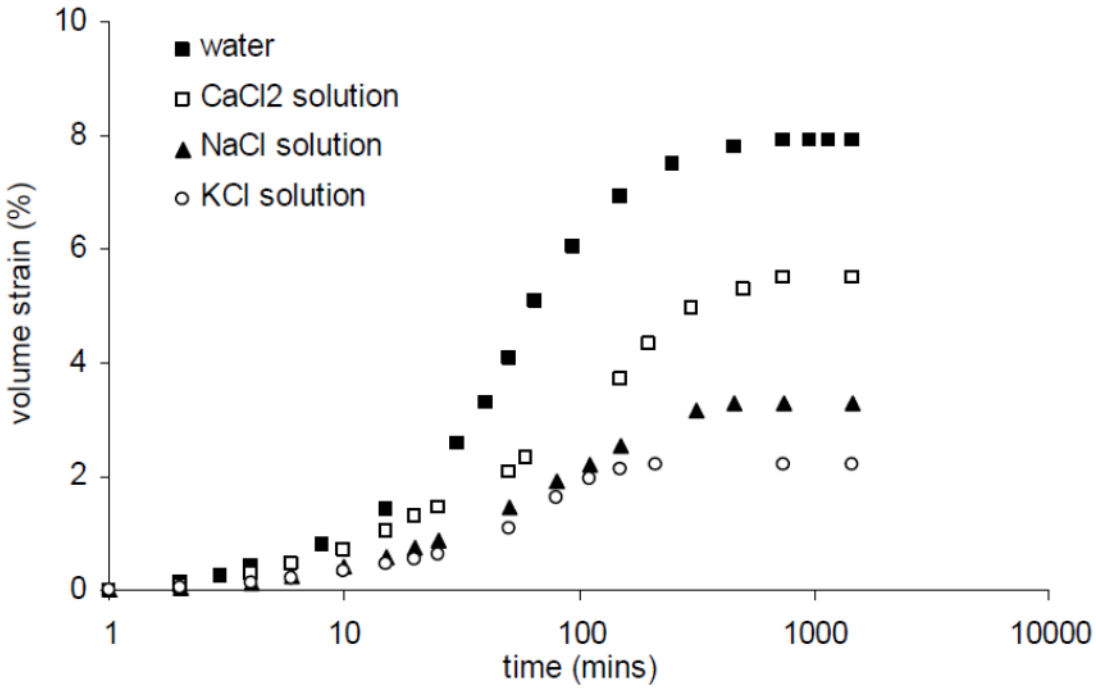

Source: William and Airey (2004).

Note: Testing on Bringelly Shale; solutions are in 1 molar concentrations.

Figure 16: Effect of immersion fluid on free swell of Bringelly shale.

The petroleum industry has encountered a number of problems in drilling through mudstone units including swell. As a result, the industry commonly adds a number of chemicals to the drilling fluid to counter these problems including mudstone swell. Testing on three mudrocks (London clay, Oxford clay, and Fuller's Earth) was conducted by Amanullah et al. (1997) with chemical additives typical to the drilling industry for water-based mud systems to identify the effects on swell.

This testing indicated that organic compounds and polymers such as polyamine, glycol, partially-hydrolyzed polyacrylamide (PHPA), and sodium carboxymethyl cellulose (CMC) can also substantially reduce swell, with a polyamine + glycol solution having the largest effect on the rocks studied (Amanullah et al., 1997).

Table 8: Various Additives for Clay Stabilization by Fink (2013)

No.	Additive
1	Polymer Latices
2	Polyacrylamide
3	Partially Hydrolyzed Polyvinylacetate
4	Copolymer of Anionic and Cationic Monomers: Acrylic Acid, Methacrylic Acid, 2-Acrylamido-2-Methyl-1-1 Propane Sulfonic Acid, Dimethyldiallyl Ammonium Chloride
5	Nitrogen
6	Partially Hydrolyzed Acrylamide-Acrylate Copolymer, Potassium Chloride, and Palyanionic Cellulose
7	Aluminum/Guanidine Complexes with Cationic Starches and Polyalkylene Glycols
8	Hydroxyaldehydes or Hydroxyketones
9	Polyols and Alkaline Salt
10	Tetramethylammonium Chloride and Methyl Chloride Quaternary Salt of Polyethyleneimine
11	Pyruvic Aldehyde and A Triamine
12	Quaternary Ammonium Compounds
13	In Situ Crosslinking of Epoxide Resins
14	Oligomer (Methyl Quaternary Amine Containing 3–6 Moles of Epihalohydrin)
15	Quaternary Ammonium Carboxylates
16	Quaternized Trihydroxyalkyl Amine
17	Polyvinyl Alcohol, Potassium Silicate, and Potassium Carbonate
18	Copolymer of Styrene and Substituted Maleic Anhydride
19	Potassium Salt of Carboxymethyl Cellulose
20	Water-soluble Polymers with Sulfosuccinate Derivative-Based Surfactants, Zwitterionic Surfactants

Source: As shown by Fink (2013)

A listing of typical chemical additives to drilling mud to reduce swell is shown in Table 8. Note that some of these additives directly inhibit hydration of the mudrock mineral fabric while others simply coat the mudrock surface in the borehole, providing a barrier to flow and thereby

reducing hydration and swell.[35] A discussion on the effects of various additives is provided in more detail by van Oort (2003).

4.3.3 Still Other Factors - Temperature and pH

4.3.3.1 Temperature

It is to be expected that temperature influences swell to some degree. At elevated temperatures (greater than 200 ºC), dehydration of clay minerals can occur, which in turn can alter/damage the microstructure of the shale.[36] Further, if the temperature is high enough, the clay mineral structure itself will be altered. As reported by Yilmaz (2011), kaolinite becomes non-plastic at 400 °C and bentonite at 500 °C. In addition, thermally-treated kaolinite and bentonite up to 400 °C drastically reduces their swelling behavior.

However, at expected temperatures for many engineering applications, the temperature appears to have limited effect. Based on available data, testing indicates only a secondary effect of mid-range temperatures on swell behavior at temperatures of 10 to approximately 110 ºC. Specifically, testing by Huang et al. (1995) on shale from Alaska and Pennsylvania, at temperatures of -10 and 23 °C indicated that the temperature had only a minor effect on swell response, especially above 0 °C. In their tests, at temperatures above 10 ºC, increasing temperature did correlate with increasing swell somewhat, exhibiting an approximately 10% increase in expansion between 10 and 24 ºC. However, between 0 to 10 ºC, the amount of swell appears practically unchanged. Testing by Yong et al. (1962) on sodium montmorillonite at temperatures from 0 and 24 °C indicated only a gradual increase in swell pressures with increasing temperature in this range.

Testing at somewhat higher temperatures, Chenevert and Osisanya (1992) conducted confined swell tests on Wellington Shale[37] using deionized water, at temperatures of 24, 66 and 107 ºC.[38] For a series of tests at a pore water pressure of 17 MPa and a compaction stress of 52 MPa, the swell results at 24 and 66 ºC were very similar, and the expansion at 107 ºC was only about 15% greater.

4.3.3.2 pH

The pH of the pore water may have a strong influence on the cations available in the clay mineral structure and the swell behavior. As discussed by Mitchell and Soga (2005) pH will directly affect the electrostatic configuration of clay minerals:

> "Clay particles may have hydroxyls (OH) exposed on their surfaces and edges. The tendency for the hydroxls to dissociate... is strongly influenced by pH; the higher the pH,

---

35 Some of the additives may do both.

36 The temperature at which substantial dehydration occurs is dependent on the clay mineral, bonding ions, and other factors.

37 It is noted that the clay content of these samples were low, about 15%, illite the dominant clay mineral.

38 Testing was conducted (in English units) at 75, 150 and 225 °F, with a pore pressure of 2,500 psi, and a confining pressure of 7,500 psi.

> greater the tendency of the H+ [hydrogen ion] to go into solution, and the greater the negative charge of the particle."

In addition, low pH solutions may ionize with alumina at the edges of clay particles.

Unfortunately, no experimental work on this topic was found in available literature, so the actual effect is not evaluated in this report.

4.3.4 Anisotropy

Other factors can affect the potential to swell, including aspects of the microfabric. Given the method of mudstone deposition and the observed strength and modulus anisotropy of the material, it is not unexpected that the swell of shales is generally anisotropic as well. In many cases, the potential swell and swell pressure has been observed to be significantly greater perpendicular to the bedding plane, versus parallel to the bedding plane (replicating a transversely isotropic concept). Bock et al. (2010) illustrates this concept of swell perpendicular to and parallel to bedding with data from Wolter (2010).

For example, as observed by Chai et al. (2014), testing on mudrock from Shandong Province, China observed that swelling of a mudrock sample was highly anisotropic and correlated to the orientation bedding of the rock unit. In one case, the swelling perpendicular to bedding was 3.54% in contrast to 0.76% parallel to bedding (resulting in an anisotropy coefficient[39] of 4.6).

Anisotropy was also demonstrated by free swell tests on Queenston shale, which indicated a maximum strain of 0.6% at 100 days (perpendicular to bedding) with an anisotropy coefficient of about 2.0 (Lee and Lo, 1993). The core was stored for 5 years before testing, but the core was covered by the layer of wax and at 100% humidity (the authors indicated no change in moisture content during this period). Swelling of samples was still continuing at 1,700 days. It was also observed that salinity of the sample decreased during testing.

Testing by Wong (1998) found the swelling behavior of La Biche shale to be significantly anisotropic with an anisotropy coefficient in the range 1.74 to 4.52[40]. This author used solutions of different salinities (concentrations of NaCl of 0.0, 0.4%, 1.0% and 3%) to study swell, but the differing solutions had little observable effect on the anisotropy coefficient. (Also, as observed by others, the amount of free swell decreased as the NaCl concentration increased.) Similar anisotropy results were obtained by Wakim et al. (2009) from testing on Tournemire shale with an observed anisotropy coefficient of 4.0.

For a swell test on Bringelly shale, William and Aiey (2004) observed that the free swell strains using tap water were highly anisotropic, with an anisotropy coefficient of approximately 7

---

[39] The anisotropy coefficient is defined as the ratio of free swell perpendicular to bedding to the swell parallel to bedding.

[40] Ratio of axial to radial swelling as reported by author. It is presumed that the axial strain is perpendicular to the bedding.

(William and Aiey, 2004). Wolter (2003) conducted two free swell tests[41] on instrumented core of Opalinus clay (mudstone); the data shows anisotropy coefficient of roughly 4.7 to 6.3 (Wolter, 2003) for a ratio with the maximum strain parallel to bedding. One sample was from a horizontal borehole, the other from a vertical hole, which was provided for a comparison of measurement using the free swell device; accordingly, the measured strain perpendicular to bedding from both cases was almost identical. However, the minimum and maximum strains measured parallel to bedding in this testing were noted to be highly dissimilar, with the minimum strain parallel to bedding being effectively zero. This indicates that swell can be highly anisotropic in some cases (shown in Figure 17).

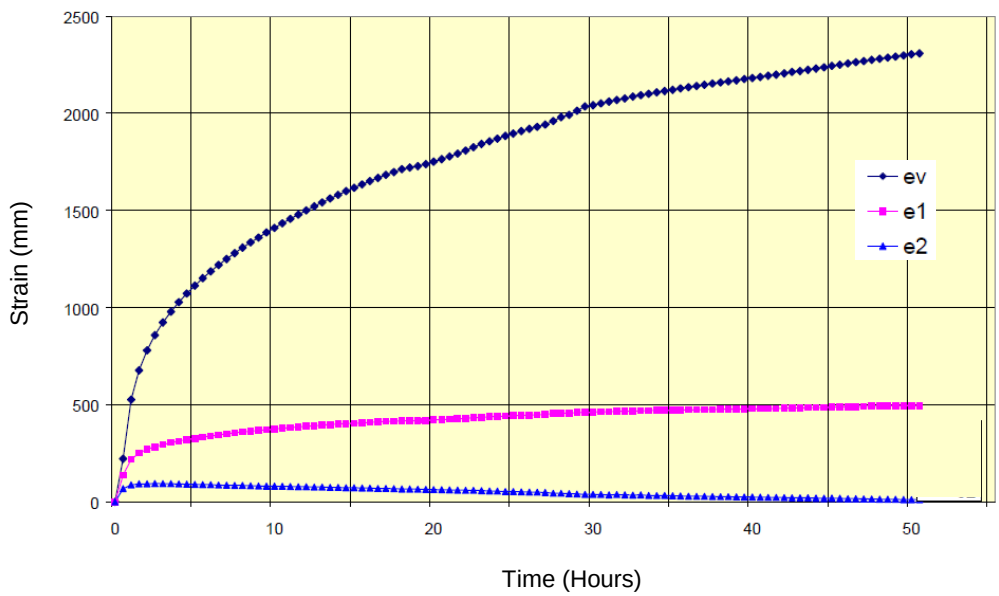

Source: Wolter (2003)

Notes

[a] ev = strain along axis of the cylindrical core; e1 = maximum lateral strain; e2 = minimum lateral strain. The ev axis is the strain perpendicular to bedding.

[b] Sample is from a vertical borehole, and the hole was drilled perpendicular to bedding.

[c] Sample was re-saturated from prior shrinkage test.

Figure 17: Example of anisotropic swell strain vs. time.

[41] The free swell apparatus device in this case was atypical, as it measures lateral strain (i.e., perpendicular to the core axis) along four axes using LVDTs, and therefore the author could compute minimum and maximum strain in this plane. The device was originally developed to measure anelastic strain recovery.

4.3.5 A Summary of Important Factors in the Swell of Shale

From a review of the statistical correlation analyses and other literature, a list of factors considered important to the clay-mineral induced swell is shown in Table 9. The table is divided into two groups: (1) intrinsic parameters, and (2) external/environmental parameters.

The intrinsic parameters describe the shale configuration as it exists at a specific point in time. At the start of an analysis, the intrinsic parameters are expected to be in some form of equilibrium condition with respect to the external conditions. However, the intrinsic conditions are not necessarily static and the behavior can change with a change in external conditions. For instance, upon unloading, a shale swells, and in turn, the microstructure changes with the expansion, and the electrostatic configuration changes as well, exhibiting path dependence.

In reviewing the intrinsic factors in the table, the initial parameters (on clay content, mineralogy type, moisture content, and density) are readily identified as important to swell from the various proposed index parameter correlations. From the theoretical basis for physiochemical swell and the long experience with drilling fluids, the next two factors on pore water geochemistry and suction/cation exchange capacity are also evident. The next factor, cementation is reflected in rock strength and classifications (e.g., uncompacted shales) and is an inhibiting factor as it does not induce swell but rather restrains the behavior. The last two parameters on micro- and macro-fabric, are perhaps also understood as important by the general technical community, but are difficult to quantify, and therefore are seldom listed or discussed in relation to shale swell.

The list of external conditions in the table describe the factors that, when changed, drive the expansion/contraction of shale. The first two factors, the state of stress and the availability of fluid are essential to the swell process. The drilling industry has actively tried to control the third factor, type and geochemistry of the external fluid, which in the case of drilling is drilling fluid (drilling mud) and has seen extensive investigations. The last factor, temperature, is expected to influence physiochemical swell but the extent may be minor at near-surface temperatures (say less than 200 ^{o}C).

Table 9: Factors Considered Important in Assessing Shale Swell Behavior In Situ

No.	Physical Property	Comment
Intrinsic Parameters		
1	Total Clay Mineral Content	
2	Clay Mineralogy	Type and percentage of individual clay minerals and organic content Surrogates: Index Parameters: *PI, LL*
3	Moisture Content	
4	Density/Void Ratio	
5	Pore Water Geochemistry	
6	Suction/Cation Exchange Capacity	
7	Degree of Cementation	Can be assessed by direct of Brazilian tensile strength, or uniaxial compressive strength
8	Microfabric Including the Degree of Anisotropy, Effective and Isolated Porosities, Permeability	Including: structure of unit, grading variation, heterogeneities, density of micro-discontinuities such as laminations, and microcracks Note that the microfabric of the unit will be altered by stress history/stress change
9	Macrofabric	Including: type, frequency and spacing of discontinuities (fractures, bedding planes, slickensides), orientation of discontinuities, and fracture aperture and coatings
External / Environmental Parameters Inducing Expansion/Contraction		
1	External State of Stress	Magnitude and orientation of external stresses and the stress path of load change
2	Availability of External Fluids	Availability can be variable with time; includes humidity in air; chemistry and ionic structure
3	External Fluid Type and Related Geochemistry (Including Electrolyte and pH)	The type and concentration of salts and other chemicals in fluid can affect swell significantly
4	Temperature	May be a minor influence at near surface temperatures

Notes:

[a] *PI* = plasticity index; *LL* = liquid limit

[b] Core size is expected to affect the amount of swell results in the laboratory

5. CONCLUSIONS AND RECOMMENDATIONS

5.1 CONCLUSIONS

A review of the hydration response of clay minerals, clays and shales[42] is presented as a basis for evaluating the swell response of shale to CO_2. The review demonstrates that the hydration-induced expansion of argillaceous materials is a complex topic involving differing swell mechanisms, is controlled by a variety of structures in the microfabric, ranging from the nanoscopic scale to lab scale, and is influenced by a number of factors, both internal and external.

Significant conclusions of the review are:

On Swell Mechanisms:

- It is understood that all clay minerals will swell upon hydration and stress change. However, there is a large range in this behavior depending on the microfabric, and expansion can range from the negligible (in an engineering sense) to very pronounced, causing extensive damage.
- Three mechanisms underlying the behavior of shale upon hydration are identified: (1) *Mineral alteration swell*: an alteration of a mineral in the rock mass inducing expansion; (2) *Mechanical swell*: the result of reduction in capillary-related pressures upon wetting, causing a mechanical response; and (3) *Physiochemical swell*: physiochemical reactions of clay minerals that expand the rock matrix due to sorption
- The swell behavior of phyllosilicates is determined by the mineralogy of the solids, the chemistry of the pore water, and the degree of aggregation of the particles
- While a number of possible sorption mechanisms can be proposed for physiochemical swell of clay minerals, there is no consensus on the actual mechanisms that apply. The applicable mechanisms will also vary with mineral species.
- Physiochemical swell is considered the dominate mechanism applicable to CO_2 swell, but mechanical swell may also a factor

On Laboratory Testing:

- Several testing techniques have been employed to evaluate rock swell potential, but most current techniques have significant limitations. For example, Atterberg limit testing requires deaggregation of the material, which destroys the microfabric of the rock sample.
- Sample disturbance can be a significant factor in interpreting laboratory data, especially due to changes in water content and stress. In particular, the drying of the sample during storage and prior to testing is often overlooked. Testing should also consider pressurization of the sample prior to testing to restore the in situ stress conditions on the

[42] The definition of shale is provided in the Part I of this report series (Lindner, 2016).

sample so to limit sample disturbance from unloading and provide more-representative results.

- Sample damage can potentially include the generation of microfractures during coring and subsequent depressurization from in situ stresses

On Experimental Evidence of Swelling:

- Based on a review of hydration swell correlations, it is evident that a single factor cannot predict swell potential or pressure accurately for shale. The most prominent factors for shale swell testing are water content, clay content and strength. For clay minerals and clays, Atterberg limits also show good correlations, but are not included in some shale-related studies.
- Both intrinsic and external factors can influence the swell of shales in the field. The intrinsic parameters describe the shale configuration/formation as it exists at a specific point in time. External factors describe the conditions that, when changed, drive the expansion/contraction of shale. These factors are not identical to the factors identified for artificial or natural clay (as reported by others) due to lithification of the shale.
- In addition to factors considered in reported correlation studies, factors such as the degree of cementation of rock material, the type and chemistry of the external fluid(s), fabric anisotropy, the temperature, and pH are also expected to influence the amount of potential swell.
- A comprehensive list of factors that influence hydration swell of shales is proposed (see Table 7)

5.2 RECOMMENDATIONS

From this review, several areas are identified for future research to construct a more comprehensive understanding of shale behavior. The following items are recommended:

- Implementation of a test program to investigate the effect of microfracturing on shale. This testing can be conducted using X-ray scanning and other techniques in understanding basic fabric of the sample before and after testing.
- Further development of the hollow cylinder test system concept and the establishment of a standard testing method of swell testing with this apparatus. In contrast to other existing methods, this type of test system can provide a more representative set of conditions to simulate the borehole environment, and can be applied to issues such as borehole stability as well as swell.
- Development of alternative methods to study swell behavior (including non-destructive petrophysical methods, imaging techniques including scanning electron microscopy and X-ray computed tomography, and the measurement of dielectric properties and ultrasonic wave velocity measurements). These methods can provide additional insight into microfabric changes during testing.
- Development of techniques to study the effects of true-triaxial (polyaxial) stress on swell.

- Identification of the required set of tests to fully characterize shale samples for swell and implementing this methodology on a set of reference shales.
- Study of the effect of depressurization on the geomechanical properties and swell response of shales. This testing would determine the significance of possible sample damage and characterize the effect on swell. The test program would require the use and development of techniques and equipment that will maintain the in situ pressure on shale samples from coring through testing.

6. REFERENCES

Adisoemarta, P. S. Complex Electrical Properties of Shale as a Function of Frequency and Water Content. PhD Thesis, Texas Tech University, Lubbock, TX, 1999.

Aker, E.; Skurtveit, E.; Grande, L.; Cuisiat, F.; Johnsen, Ø.; Soldal, M.; Bohloli, B. Experimental Methods for Characterization of Cap Roc Properties. In *Multiphysical Testing of Soils and Shales. Recent Research on Multiphysical Testing of Soils and Shales*; Laloui, L., Ferrari, A., Eds.; Springer Verlag: Berlin, Germany, 2013; pp 304–308.

Amanullah, M. D.; Marsden, J. R.; Shaw, H. F. An Experimental Study of the Swelling Behaviour of Mudrocks in the Presence of Water-based Mud Systems. *The Journal of Canadian Petroleum Technology* **1997,** *36*, 45–50.

Anderson, W. H. *Foundation Problems and Pyrite Oxidation in the Chattanooga Shale, Estill County, Kentucky*; Report of Investigations 18, Series XII; Kentucky Geological Survey, University of Kentucky: Lexington, KY, 2008.

ASTM D4318-10e1. Standard Test Methods for Liquid Limit, Plastic Limit, and Plasticity Index of Soils. ASTM International: West Conshohocken, PA, 2010.

ASTM D4546-14. Standard Test Methods for One-Dimensional Swell or Collapse of Soils, ASTM International, West Conshohocken, PA, 2014

ASTM D4943-08. Standard Test Method for Shrinkage Factors of Soils by the Wax Method. ASTM International: West Conshohocken, PA, 2008.

Atterberg, A. M. Die Plastizität der Tone. *Internationale Mitteilungen für Bodenkunde* **1911a,** *1*, 10–43.

Atterberg, A. M. Lerornas Forhållande Till Vatten, Deras Plasticitetsgränser Och Lasticitetsgrader. *Kungliga Lantbruksakademiens Handlingar och Tidskrift* **1911b,** *50*, 132–158.

Bailey, S. W. Summary of Recommendations of AIPEA Nomenclature Committee on Clay Minerals. *American Mineralogist* **1980,** *65*, 1–7.

Barla, M. Tunnels in Swelling Ground - Simulation of 3D Stress Paths by Triaxial Laboratory Testing. PhD Thesis, Geotechnical Engineering, Politecnico di Torino, Turin, Italy, 1999.

Bilir, M. E.; Müftüoğlu, Y. V.; Sari, D. A Computer-Controlled Triaxial Swelling Test Apparatus. *Turkish Journal of Engineering and Environmental Sciences* **2004,** *28*, 269–280.

Bock, H.; Dehandschutter, B.; Martin, C. D.; Mazurek, M.; Haller, A. D.; Skoczylas, F.; Davy, C. *Self-Sealing of Fractures in Argillaceous Formations in the Context of Geological Disposal of Radioactive Waste – Review and Synthesis*; Clay Club Report; Report NEA No. 6184; Boulogne-Billancourt, France: Nuclear Energy Agency (NEA), Organization for Economic Cooperation and Development (OECD), 2010.

Börner, J. H.; Herdegen, V.; Repke, J.-U.; Spitzer, K. The Impact of CO_2 on the Electrical Properties of Water Bearing Porous Media - Laboratory Experiments With Respect to Carbon Capture and Storage. *Geophysical Prospecting* **2013,** *61*, 446–460.

Brackley, I. J. A. Swell under Load. Proceedings, 6th Regional Conference for Africa on Soil Mechanics and Foundation Engineering, Durban, Balkema: Cape Town, South Africa, Sept 1975; p 65–70.

Bryan, C. R.; Dewers, T. A.; Heath, J. E.; Wang, Y.; Matteo, E. N.; Meserole, S. P.; Tallant, D. R. *Fundamental Study of CO_2-H_2O-Mineral Interactions for Carbon Sequestration, with Emphasis on the Nature of the Supercritical Fluid-Mineral Interface*; Report SAND2013-8251; Sandia National Laboratories: Albuquerque, NM, 2013.

Carey, B.; Frash, L.; Viswanathan, H. Triaxial Experiment Studies of Fracture-Permeability Behavior of Shale. Presentation at Shales at All Scales, Exploring Coupled Processes, Sandia National Lab Workshop in Santa Fe, New Mexico, June 8–10, 2015. https://share.sandia.gov/shalex/agenda-2/

Chai, Z. Y.; Kang, T. H.; Feng, G. R. Effect of Aqueous Solution Chemistry on the Swelling of Clayey Rock. Note. *Applied Clay Science* **2014,** *93–94*, 12–16.

Chen, F. H. *Foundations on Expansive Soils*, 2nd Ed. Elsevier: New York, NY, 1988.

Chen, X.; Tan, C. P.; Haberfield, C. M.; Wu, B. Modelling of the Undrained Behaviour of Wellbores. In *The Geotechnics of Hard Soils-Soft Rocks*; Evangelista, A., Picarelli, L., Eds.; Proceedings 2nd International Symposium on Hard Soils-Soft Rocks, Oct 11–14, 1998, Balkema: Napoli, Italy. Rotterdam, the Netherlands, 1998; p 483–489.

Chenevert, M. E. *Drilling Fluid Optimization in Shales: Swelling Pressure and Compressive Strength Of Shale*; University of Texas at Austin for Gas Research Institute, Producer Business Unit; Gas Research Institute: Chicago, IL, 1998.

Chenevert, M. E.; Amanullah, M. Shale Preservation and Testing Techniques for Borehole-Stability Studies; Paper SPE-73191-PA; *SPE Drilling & Completion* **2001,** *16*, 146–149.

Chenevert, M. E.; Osisanya, S. O. Shale Swelling at Elevated Temperature and Pressure. Proceedings, 33th U.S. Symposium on Rock Mechanics (USRMS), Santa Fe, NM, June 3–5, 1992. Balkema: Rotterdam, the Netherlands, 1992; pp 869–878.

Dakshanamurthy, V., Raman, V. A Simple Method of Identifying an Expansive soil. Soils and foundations. *Japanese Society of Soil Mechanics and Foundation Engineering* **1973**, *13*, 97–104.

Day, R. W. *Foundation Engineering Handbook*; McGraw-Hill Companies: New York, NY, 2005.

Dick, J. C.; Shakoor, A. Lithological Controls of Mudrock Durability. *Quarterly Journal of Engineering Geology and Hydrogeology* **1992,** *25*, 31–46.

Dixon, J. B.; Weed, S. B. *Minerals in Soil Environments*; SSA Book Series, Series 1, 2nd Ed.. Soil Science Society of America Book Series; Soil Science Society of America: Madison, WI, 1989.

Djedid, A.; Ouadah, N. Indirect Estimation of Swelling Clay Soils Parameters. *Electronic Journal of Geotechnical Engineering (EJGE)* **2013,** *18*, 661–670. http://www.ejge.com/2013/Ppr2013.057alr.pdf

Dobrowolsky, M.; Vrettos, C. Swell and Shrink Tests in Modified Oedometer Apparatuses. In *Advanced Experimental Unsaturated Soil Mechanics*; Tarantino, A., Romero, E., Cui Y., Eds.; J.; Proceedings of the International Symposium on Advanced Experimental Unsaturated Soil Mechanics, June 27–29, 2005, Taylor Francis Group: Trento, Italy, London, United Kingdom, 2005; pp 163–168.

Dubbé, D. D.; Usmen, M. A.; Moulton, L. K. Expansive Pyritic Shales. In *Factors Affecting Pavement Performance, Transportation Research Record 993*; Transportation Research Board: Washington, DC, 1984; pp 19–27.

Duncan, N. Engineering Geology and Rock Mechanics, Vol 1.; Leonard Hill: London, Great Britain, 1969.

Eid, H. T. Factors Influencing Determination of Shale Classification Indices and their Correlation to Mechanical Properties. *Geotechnical and Geological Engineering* **2006,** *24*, 1695–1713.

Einstein, H. H. Tunnelling in difficult ground—Swelling Behaviour and Identification of Swelling Rocks. *Rock Mechanics and Rock Engineering* **1996,** *29*, 113–124.

Endres, A. L.; Knight, R. J. Incorporating Pore Geometry and Fluid Pressure Communication into Modeling the Elastic Behavior of Porous Rocks. *Geophysics* **1997,** *62*, 106–117.

Ewy, R. T. Shale/Claystone Response to Air and Liquid Exposure, and Implications for Handling, Sampling and Testing. *International Journal of Rock Mechanics and Mining* Sciences **2015,** *80*, 388-401.

Farrokhrouz, M.; Asef, M. R. *Shale Engineering: Mechanics and Mechanisms*; CRC Press/Balkema: Leiden, Netherlands, 2013.

Ferrari, A.; Laloui, L. Advances in the Testing of the Hydro-mechanical Behaviour of Shales. In *Multiphysical Testing of Soils and Shales*; Laloui, L., Ferrari, A., Eds.; Series: Recent Research on Multiphysical Testing of Soils and Shales; Springer Verlag: Berlin, Germany, 2013; pp 57–68.

Fink, J. K. *Hydraulic Fracturing Chemicals and Fluids Technology*; Gulf Professional Publishing: Amsterdam, Netherlands, 2013.

Franklin, J. A.; Dusseault, M. B. *Rock Engineering*; McGraw-Hill Publishing: New York, NY, 1989.

Ghorbani, A.; Zamora, M.; Cosenza, P. Effects of Desiccation on the Elastic Wave Velocities of Clay-rocks. *International Journal of Rock Mechanics and Mining Sciences* **2009,** *46*: 1267–1272.

Gillott, J. E. *Clay in Engineering Geology*; American Elsevier Publishing: New York, NY, 1968.

Gomez-Gutierrez, I.; Bryson, L.; Hopkins, T. Correlations between Geotechnical Properties and the Swell Behavior of Compacted Shales; Han, J., Alzamora, D. E., Eds.; In Proceedings of Geo-Frontiers 2011, Advances in Geotechnical Engineering, Dallas, TX, March 13–16, 2011; ASCE Geotechnical Special Publication No. 211; American Society of Civil Engineers: Reston, VA, 2011; 4119–4128.

Grim, R. E. *Clay Mineralogy*; McGraw-Hill: New York, 1968.

Guggenheim, S.; Adams, J. M.; Bain, D. C.; Bergaya, F.; Brigatti, M. F.; Drits, V. A.; Formoso, M. L. L.; Galán, E.; Kogure, T.; Stanjek, H. Summary of Recommendations of Nomenclature Committees Relevant To Clay Mineralogy; Report of the Association Internationale Pour L'etude Des Argiles (AIPEA) Nomenclature Committee for 2006; *Clays and Clay Minerals* **2006,** *54*, 761–772.

Guggenheim, S.; Martin, R. T. Definition of Clay and Clay Mineral: Joint Report of the AIPEA Nomenclature and CMS Nomenclature Committees. *Clays and Clay Minerals* **1995,** *43*, 255–256.

Guo, Q.; Blue, A.; Friedheim, J. Testing Methods for Evaluating Drilling Fluid Effects on Gas Shale Stability. In 49th U.S. Rock Mechanics/Geomechanics Symposium, San Francisco, CA, June 28–July 1, 2015; American Rock Mechanics Association (ARMA): Alexandria, VA, 2015; ARMA-2015-479.

Halliburton (Halliburton Company). CoreVault Fluid and Rock Sampling Service. Brochure H011158. Houston, TX: 2014. http://www.halliburton.com/public/lp/contents/Data_Sheets/web/H/H011158.pdf (accessed 06/03/2016).

Hawkes, I.; Mellor, M. Uniaxial Testing in Rock Mechanics Laboratories. *Engineering Geology* **1970,** *4*, 177–285.

Hensen, E. J. M.; Smit, B. Why Clays Swell. *Journal of Physical Chemistry B* **2002,** *106*, 12664–12667.

Holtz, R. D.; Kovacs, W. D.; Sheahan, T. C. *An Introduction to Geotechnical Engineering*, 2nd Ed.;. Pearson: Upper Saddle River, NJ, 2011.

Hopkins, T. C.; Deen, R. C. Identification of Shales. *ASTM Geotechnical Testing Journal, GTJODJ* **1984,** *7*, 10–18.

Huang, S. L.; Aughenbaugh, N. B.; Rockaway, J. D. Characterization of Swelling Potential of Shale Strata. Proceedings, 27th U.S. Symposium on Rock Mechanics, June 23–25, 1986, American Rock Mechanics Association: Tuscaloosa, AL, 1986; pp 69–76.

Huang, S. L.; Speck, R. C.; Wang, Z. The Temperature Effect on Swelling of Shales under Cyclic Wetting and Drying. *International Journal of Rock Mechanics and Mining Sciences and Geomechanics Abstracts* **1995,** *32*, 227–236.

Ishida, T.; Aoyagi, K.; Niwa, T.; Chen, Y.; Murata, S.; Chen, Q.; Nakayama, Y. Acoustic Emission Monitoring of Hydraulic Fracturing Laboratory Experiment with Supercritical and Liquid CO_2. *Geophysical Research Letters* **2012,** *39*, L16309.

ISRM (International Society of Rock Mechanics, Commission on Swelling Rock). Task A: Characterization of Swelling Rock, Section A.2 Underlying Mechanisms; Pergamon Press: Oxford Great Britain, 1983a.

ISRM (International Society of Rock Mechanics, Commission on Testing Methods). Suggested Methods for Determining Water Content, Porosity, Density, Absorption and Related Properties and Swelling and Slake-Durability Index Properties. *International Journal of Rock Mechanics and Mining Sciences and Geomechanics Abstracts* **1979,** *16*, 141–156.

ISRM (International Society of Rock Mechanics, Commission on Testing Methods). Suggested Methods for Determining the Strength of Rock Materials in Triaxial Compression, Revised version; *International Journal of Rock Mechanics and Mining Sciences and Geomechanics Abstracts* **1983b,** *20*, 285–290.

ISRM (International Society of Rock Mechanics, Commission on Testing Methods). Suggested Method For the Complete Stress-Strain Curve for Intact Rock in Uniaxial Compression. *International Journal of Rock Mechanics and Mining Sciences* **1999,** *36*, 297–289.

Johnson, A. L. Particle Size Distribution in Clays. *Clays and Clay Minerals* **1952,** *1*, 89–91.

Josh, M.; Esteban, L.; Delle Piane, C.; Sarout, J.; Dewhurst, D. N.; Clennell, M. B. Laboratory Characterisation of Shale Properties. *Journal of Petroleum Science and Engineering* **2012,** *88–89*, 107–124.

Kohli, A. H.; Zoback, M. D. Frictional Properties of Shale Reservoir Rocks. *Journal of Geophysical Research: Solid Earth* **2013,** *118*, 5109–5125.

Kuhlman, K. L.; Brady, P. V.; Mackinnon, R. J.; Gardner, W. P.; Heath, J. E.; Herrick, C. G.; Jensen, R. P.; Hadgu, T.; Sevougian, S. D.; Birkholzer, J.; Freifeld, B. M.; Daley, T. *Deep Borehole Field Test: Characterization Borehole Science Objectives, Fuel Cycle Research and Development*; Report SAND2015-4424R; ID: FCRD-UFD-2015-000131 Rev. 0; Sandia National Laboratories: Albuqueque, NM, 2015.

Lama, R. D.; Vutukuri, V. S. *Handbook on Mechanical Properties of Rocks, Testing Techniques and Results - Volume IV*; Series on Rock and Soil Mechanics, Vol 3; Trans Tech SA: Clausthal, Germany, 1978.

Lee, Y. N.; Lo, K. Y. The Swelling Mechanism of Queenston Shale. *Canadian Tunnelling* **1993,** 75–97.

Lindner, E. Swelling Rock: A Review. Proceedings, Rock Engineering for Foundations and Slopes; American Society of Civil Engineers Specialty Conference, Boulder, CO, Aug 15–18, 1976; American Society of Civil Engineers: New York, NY, 1976; pp 141–181.

Lindner, E. *Review of the Effects of CO_2 on Very-Fine-Grained Sedimentary Rock/Shale - Part I: Problem Definition*; NETL-TRS-1-2016; NETL Technical Report Series; U.S. Department of Energy, National Energy Technology Laboratory: Morgantown, WV, 2016; p 68.

Lundegard, P. D.; Samuels, N. D. Field Classification of Fine-Grained Sedimentary Rocks. *Journal of Sedimentary Petrology* **1980,** *50*, 781–786.

Madsen, F. T. Suggested Methods for Laboratory Testing of Swelling Rocks. ISRM Suggested Methods (SMs): Second Series. *International Journal of Rock Mechanics and Mining Sciences* **1999,** *36*, 291–306.

Madsen, F. T.; Vonmoos, M. M. Swelling Pressure Calculated from Mineralogical Properties of a Jurassic Opalinum Shale, Switzerland. *Clays and Clay Minerals* **1985,** *33*, 501–509.

Madsen, F. T.; Vonmoos, M. M. The Swelling Behaviour of Clays. *Applied Clay Science* **1989,** *4*, 143–156.

Maher, M. L. J.; Azzie, B.; Gray, C.; Hunt, J. A Large Scale Laboratory Swell Test to Establish the Susceptibility to Expansion of Crushed Rock Containing Pyrite. Proceedings; 2011 Pan Am CGS Geotechnical Conference: 64th Canadian Geotechnical Conference and 14th Pan-American Conference on Soil Mechanics and Geotechnical Engineering, Oct 2–6, 2011; Paper 234. http://geoserver.ing.puc.cl/info/conferences/PanAm2011/panam2011/pdfs/GEO11Paper234.pdf

McBride, M. B. Chapter 2: Surface Chemistry of Soil Minerals. In *Minerals in Soil Environments*; SSA Book Series, Series 1, 2nd Ed.; Soil Science Society of America Book Series; Dixon, J. B., Weed, S. B., Eds.; Soil Science Society of America: Madison, WI, 1989; pp 35–88.

McKeen, R. G. A Model for Predicting Expansive Soil Behavior. Proceedings of the 7th International Conference on Expansive Soils, Dallas, TX, Aug 3–5, 1992; Tech University Press: Lubbock, TX, 1992; pp 1–6.

Mitchell, J. K.; Soga, K. *Fundamentals of Soil Behavior*, 3rd ed.; John Wiley & Sons: Hoboken, NJ, 2005.

Monfared, M.; Delage, P.; Sulem, J.; Mohajerani, M.; Tang, A. M.; DeLaure, E. A New Hollow Cylinder Triaxial Cell to Study the Behavior of Geo-Materials with Low Permeability. *International Journal of Rock Mechanics and Mining Sciences* **2011,** *48*, 637–649.

Morgenstern, N. R.; Eigenbrod, K. D. Classification of Argrillaceous Soils and Rocks. *Journal of the Geotechnical Division, American Society of Civil Engineers (ASCE)* **1974,** *100*, 1137–1156.

Muntohar, A. S. Chapter 3: Prediction and Classification of Expansive Clay Soils. In: Expansive Soils, Recent Advances in Characterization and Treatment; Al-Rawas, A. A., Goosen, M. F. A., Eds.; Taylor and Francis: London, United Kingdom, 2006; pp 25–36.

Nayak, N. V.; Christensen, R. W. Swelling Characteristics of Compacted, Expansive Soils. *Clays and Clay Minerals* **1971,** *19*, 251–261.

O'Brien, D. E.; Chenevert, M. E. Stabilizing Sensitive Shales with Inhibited Potassium-Based Drilling Fluids. *Journal of Petroleum Technology* **1973,** *25*, 1089–1100; Paper SPE 4232 PA.

Olsen, H. W.; Crossley, L.; Nelson, K.; Chabrillat, S.; Goetz, A. F. H.; Noe, D. C. Mineralogy-Swelling Potential Relationships for Expansive Shales. Proceedings, GeoDenver 2000, Advances in Unsaturated Geotechnics, Denver, CO, Aug 5, 2000; American Society of Civil Engineers: Reston, VA, 2000; *Geotechnical Special Publication 99*, 361–378.

Pimentel, E. Existing Methods for Swelling Tests – A Critical Review. *Energy Procedia* **2015,** *76*, 96–105.

Priest, J. A.; Druce, M.; Roberts, J.; Schultheiss, P.; Nakatsuka, Y.; Suzuki, K. PCATS Triaxial: A new geotechnical apparatus for characterizing pressure cores from the Nankai Trough, Japan. *Marine and Petroleum Geology* **2015,** *66*, 460–470.

Rauh, F.; Thuro, K. Investigations on the Swelling Behavior of Pure Anhydrites. Proceedings, 1st Canada - U.S. Rock Mechanics Symposium, Vancouver, Canada, May 27–31, 2007;

American Rock Mechanics Association (ARMA): Alexandria, VA, 2007; Paper ARMA-07-093. http://www.geo.tum.de/people/thuro/pubs/2007_1st_CA-US_RMS_anhydrite.pdf

Roshan, H.; Ehsani, S.; Marjo, C. E.; Andersen, M. S.; Acworth, R. I. Mechanisms of Water Adsorption into Partially Saturated Fractured Shales: An Experimental Study. *Fuel* **2015,** *159*, 628–637.

Rowe, R. K. *Geotechnical and Geoenvironmental Engineering Handbook*; Springer Science+Business Media: New York, NY, 2001.

Santarelli, F. J.; Carminati, S. *Do Shales Swell? A critical review of available evidence*. Proceedings 1995 SPE/IADC Drilling Conference, Amsterdam, Netherlands, Feb 28–Mar 2, 1995; Paper SPE/IADC 29421.

Santos, H. M. R.; Diek, A.; Roegiers, J. C.; da Fontoura, S. A. B. Investigation of the Effects of Sample Handling Procedures on Shale Properties. Proceedings 2nd North American Rock Mechanics Symposium, Montreal, Quebec., June 19–21, 1996; Balkema: Rotterdam, the Netherlands, 1996; pp 951–958.

Santos, H.; Diek, A.; da Fontoura, S.; Roegiers, J.-C. Shale Reactivity Test: A Novel Approach to Evaluate Shale-Fluid Interaction. *International Journal of Rock Mechanics and Mining Sciences* **1997,** *34*; Paper No. 268.

Sarman, R.; Shakoor, A.; Palmer, D. F. A Multiple Regression Approach to Predict Swelling in Mudrocks. *Bulletin of Engineering Geology and the Environment* **1994,** *XXXI*, 107–121.

Schanz T.; Tripathy, S. Swelling Pressure of a Divalent-Rich Bentonite: Diffuse Double-Layer Theory Revisited. Paper W00C12. *Water Resources Research* **2009**, *45*, 9.

Seed, H. B.; Woodward, R. J.; Lundgren, R. Prediction of Swelling Potential for Compacted Clays. *Journal of Soil Mechanics and Foundation Division ASCE* **1962,** *88*, 53–87.

Shakoor, A.; Sarman, R. Swelling Potential Classification of Mudrocks Based on Geotechnical Properties. In Rock Characterization; Hudson, J. A., Ed.; ISRM Symposium Eurock'92, Chester, Sept 14–17, 1992; Thomas Telford Services Ltd.: Heron Quay, Great Britain, 1992; Paper 14; pp 75–80.

Shaw, D. B.; Weaver, C. E. The Mineralogical Composition of Shales. *Journal of Sedimentary Petrology* **1965,** *35*, 213–222.

Sherwood, J. D.; Bailey, L. Swelling of Shale around a Cylindrical Wellbore. Proceedings of the Royal Society of London A: Mathematical. *Physical and Engineering Sciences* **1994,** *444*, 161–184.

Skippervik, C. P. Study on the Swelling Potential of Some Selected Rocks. MS Thesis, Department of Geology and Mineral Resources Engineering, Norwegian University of Science and Technology, Trondheim, Norway, 2014.

Snethen, D. R.; Johnson, L. D.; Patrick, D. M. *An Investigation of the Natural Microscale Mechanisms That Cause Volume Change in Expansive Clays*; Federal Highway Administration Report No. FHWA-RD-77-75; U. S. Department of Transportation: Washington, DC, 1977.

Steiner, W. Swelling Rock tn Tunnels: Rock Characterization, Effect of Horizontal Stresses and Construction Procedures. *International Journal of Rock Mechanics, Mining Sciences and Geomechanics Abstracts* **1993,** *30*, 361–380.

Talesnick, M. L.; Ringel, M. Completing The Hollow Cylinder Methodology for Testing of Transversely Isotropic Rocks: Torsion Testing. *International Journal of Rock Mechanics and Mining Sciences* **1999,** *36*, 627–639.

Taylor, R. K.; Smith, J. The Engineering Geology of Clay Minerals: Swelling, Shrinking and Mudrock Breakdown. *Clay Minerals* **1986,** *21*, 235–260.

Terzaghi, K.; Peck, R. B.; Mesri, G. *Soil Mechanics in Engineering Practice*, 3rd Ed.; New York, John Wiley & Sons: New York, 1996.

Thakur, V. K. S.; Singh, D. N. Rapid Determination of Swelling Pressure of Clay Minerals. Paper JTE11866. *Journal of Testing and Evaluation*, **2005**, *33*, 239–245.

U.S. Army. *Foundations in Expansive Soils*; Technical Manual, TM 5-818-7; Headquarters, United States Department of the Army: Washington, DC, 1983.

Underwood, L. B. Classification and Identification of Shales. *ASCE Journal of the Soil Mechanics and Foundations Division* **1967,** *93*, 97–116.

van der Merwe, D. H. Prediction of Heave from the Plasticity Index and Percentage of Clay Fraction of Soils. *Transactions of the South African Institution of Civil Engineers* **1964,** *6*, 103–107.

van der Merwe, D. H. Contribution to Specialty Session B, Current Theory and Practice for Building on Expansive Clays. Proceedings 6th Regional Conference for Africa Durban, *Soil Mechanics and Foundation Engineering* **1975,** *2*, 166–167.

van Oort, E. On the Physical and Chemical Stability of Shales. *Journal of Petroleum Science and Engineering* **2003,** *38*, 213–235.

Wagner, J. F. Mechanical Properties of Clays and Clay Minerals. In Handbook of Clay Science, Part A: Fundamentals, 2nd Ed.; Bergaya, F., Lagaly, G., Eds.;. Elsevier: Amsterdam, Netherlands, 2013; pp 347–382.

Wakim, J.; Hadj-Hassen, F.; DeWindt, L. Effect of Aqueous Solution Chemistry on the Swelling and Shrinkage of the Tournemire Shale. *International Journal of Rock Mechanics & Mining Sciences* **2009,** *46*, 1378–1382.

Wang, J. G.; Ju, Y.; Gao, F.; Peng, Y.; Gao, Y. Effect of CO_2 Sorption-Induced Anisotropic Swelling on Caprock Sealing Efficiency. *Journal of Cleaner Production* **2015,** *103*, 685–695.

Wayllace, A. Volume Change and Swelling Pressure of Expansive Clay in the Crystalline Swelling Regime. PhD Thesis, Department of Civil and Environmental Engineering, University of Missouri, Columbia, MS, 2008.

William, E.; Airey D. Index Properties and the Engineering Behaviour of Bringelly Shale. *Australian Geomechanics* **2004,** *39*, 31–42. http://www.google.com/url?sa=t&rct=j&q=&esrc=s&source=web&cd=55&ved=0ahUKEwi5g-

b0vMzJAhUDbT4KHeA2DwYQFgjzAjA2&url=http%3A%2F%2Faustraliangeomechanics.org%2Fadmin%2Fwp-content%2Fuploads%2F2015%2F03%2F39_3_3.pdf&usg=AFQjCNFsOnAKssxGMNN0WU_vU_qLsKwYVw&sig2=PcP0rcsZb-warBCIlXteIQ

Williams, A. A. B.; Donaldson, G. W. Building on Expansive Soils in South Africa, 1973-1980. Proceedings Fourth International Conference on Expansive Soils, Denver, CO, June 16–18, 1980. American Society of Civil Engineers (ASCE): New York, NY, 1980; pp 834–844.

Wilson, M. J. Rock-forming Minerals: Volume 3C, Sheet Silicates, Clay Minerals, 2nd Ed.; The Geologic Society of London: Bath, United Kingdom, 2013.

Wolter, K. E. *Rock Mechanical Analyses (RA) Experiment: Petrophysical Analyses of Drill Cores from the Opalinus Clay Formation of the Mont Terri Rock Laboratory*; Mont Terri Project Technical Note TN2002-46; Swiss National Hydrological and Geological Survey (SNHGS): Bern, Switzerland, 2003.

Wong, R. C. K. Swelling and Softening Behaviour of La Biche Shale. *Canadian Geotechnical Journal* **1998,** *35*, 206–221.

Yilmaz, G. The Effects of Temperature on the Characteristics of Kaolinite and Bentonite. *Scientific Research and Essays* **2011,** *6*, 1928–1939. *http://www.academicjournals.org/SRE*

Yilmaz, I. Indirect Estimation of the Swelling Percent and a New Classification of Soils Depending on Liquid Limit and Cation Exchange Capacity. *Engineering Geology* **2006,** *85*, 295-301.

Yong, R. N.; Taylor, R. O.; Warkentln, B. P. Swelling Pressures of Sodium Montmorllionite at Depressed Temperatures. *Clays and Clay Minerals* **1962,** 268–281.

Yukutake, H.; Shimadaj, M. A Novel Triaxial Testing Apparatus for Deformation, Fracture and Frictional Sliding of Rocks at High Pressure and Temperature. *International Journal of Rock Mechanics and Mining Sciences and Geomechanics Abstracts* **1995,** *32*, 181–184.

Zhang, C. L.; Wieczorek, K.; Xie, M. L. Swelling Experiments on Mudstones. *Journal of Rock Mechanics and Geotechnical Engineering* **2010,** *2*, 44–51.

Sean Plasynski
Executive Director
Technology Development & Integration Center
National Energy Technology Laboratory
U.S. Department of Energy

John Wimer
Associate Director
Strategic Planning
Science & Technology Strategic Plans & Programs
National Energy Technology Laboratory
U.S. Department of Energy

Traci Rodosta
Strategic Planning
Science & Technology Strategic Plans & Programs
National Energy Technology Laboratory
U.S. Department of Energy

Mark Ackiewicz
Director
Division of Carbon Capture and Storage
Office of Fossil Energy
U.S. Department of Energy

Cynthia Powell
Executive Director
Research & Innovation Center
National Energy Technology Laboratory
U.S. Department of Energy